Raymarine

AXIOM™ PRO

Installation instructions

English (en-US)
Date: 10-2017
Document number: 87319-2
© 2017 Raymarine UK Limited

Trademark and patents notice

Raymarine, **Tacktick**, **Clear Pulse**, **Truzoom**, **HSB**, **SeaTalk** , **SeaTalk hs**, **SeaTalk ng**, **Micronet**, **Raytech**, **Gear Up**, **Marine Shield**, **Seahawk**, **Autohelm**, **Automagic**, and **Visionality** are registered or claimed trademarks of Raymarine Belgium.

FLIR, **LightHouse**, **DownVision**, **SideVision**, **RealVision**, **Dragonfly**, **Quantum**, **Instalert**, **Infrared Everywhere**, **The World's Sixth Sense** and **ClearCruise** are registered or claimed trademarks of FLIR Systems, Inc.

All other trademarks, trade names, or company names referenced herein are used for identification only and are the property of their respective owners.

This product is protected by patents, design patents, patents pending, or design patents pending.

Fair Use Statement

You may print no more than three copies of this manual for your own use. You may not make any further copies or distribute or use the manual in any other way including without limitation exploiting the manual commercially or giving or selling copies to third parties.

Software updates

Check the Raymarine website for the latest software releases for your product.
www.raymarine.com/software

Product documentation

The latest versions of all English and translated documents are available to download in PDF format from the website: www.raymarine.com/manuals.
Please check the website to ensure you have the latest documentation.

Copyright ©2017 Raymarine UK Ltd. All rights reserved.

English (en-US)
Document number: 87319-2
AC;5623;2017-10-06T14:09:15

Contents

Chapter 1 Important information 9

Disclaimers 9
RF exposure 9
Compliance Statement (Part 15.19) 9
FCC Interference Statement (Part 15.105 (b)) 9
Industry Canada 10
Industry Canada (Français) 10
Japanese approvals 10
Declaration of conformity 10
Product disposal 11
Warranty registration 11
Technical accuracy 11

Chapter 2 Document and product information 13

2.1 Product documentation 14
User manuals Print Shop 14
LightHouse™ 3 MFD Operation instructions 14
2.2 Applicable products 15
Axiom™ Pro Multifunction Displays 15
2.3 Compatible transducers — Axiom™ Pro MFDs 16
RealVision transducers 16
DownVision™ transducers 17
CHIRP conical beam transducers (using DownVision™ type connector) 17
2.4 Parts supplied - Axiom Pro 9 and 12 19
2.5 Parts supplied - Axiom Pro 16 20

Chapter 3 Installation 21

3.1 Selecting a location 22
General location requirements 22
EMC installation guidelines 22
RF interference 23
Compass safe distance 23
GPS location requirements 23
Touchscreen location requirements 25
Wi-Fi location requirements 25
Viewing angle considerations 26
Product dimensions 26
3.2 Mounting options 28
3.3 Surface mounting 29
Fitting the Menu-Home button 30
Removing the bezel pieces 30
3.4 Bracket (trunnion) mounting 31

Chapter 4 Connections **33**
4.1 Connections overview 34
Connecting cables 36
4.2 Power connection 37
In-line fuse and thermal breaker ratings 37
Power distribution 37
Grounding — optional dedicated drain wire 41
4.3 NMEA 2000 (SeaTalkng ®) connection 42
4.4 NMEA 0183 connection 43
4.5 Transducer connection 44
RealVision™ 3D transducer extension cable 44
Axiom transducer adaptor cables 44
4.6 Network connection 46
4.7 GA150 connection 47
4.8 Accessory connection 48
4.9 Analog video connection 49

Chapter 5 Maintaining your display **51**
5.1 Service and maintenance 52
Routine equipment checks 52
5.2 Product cleaning 53
Cleaning the display case 53
Cleaning the display screen 53
Cleaning the sun cover 53

Chapter 6 Troubleshooting **55**
6.1 Troubleshooting 56
6.2 Power up troubleshooting 57
Performing a Power on Reset 57
6.3 GNSS troubleshooting 58
6.4 Sonar troubleshooting 59
6.5 Wi-Fi troubleshooting 62
6.6 Touchscreen troubleshooting 65
6.7 Miscellaneous troubleshooting 66

Chapter 7 Technical support **67**
7.1 Raymarine product support and servicing 68
Viewing product information 69
7.2 Learning resources 70

Chapter 8 Technical specification **71**
8.1 Axiom Pro technical specification 72
8.2 Internal sonar specification 74
RealVision™ 3D sonar specification 74

1kW sonar specification 74
8.3 Internal GNSS (GPS / GLONASS) receiver specification 75

Chapter 9 Spares and accessories 77
9.1 AXIOM Pro accessories 78
Axiom transducer adaptor cables 78
Legacy MFD adaptor plates 78
9.2 AXIOM Pro spares 79
9.3 **RayNet** to **RayNet** cables and connectors 80
RayNet to RJ45 adapter cables 81
9.4 SeaTalk ng® cables and accessories 83

Chapter 1: Important information

Warning: Product installation and operation

- This product must be installed and operated in accordance with the instructions provided. Failure to do so could result in personal injury, damage to your vessel and/or poor product performance.
- Raymarine recommends certified installation by a Raymarine approved installer. A certified installation qualifies for enhanced product warranty benefits. Contact your Raymarine dealer for further details, and refer to the separate warranty document packed with your product.

Warning: High voltage

This product contains high voltage. Adjustments require specialized service procedures and tools only available to qualified service technicians. There are no user serviceable parts or adjustments. The operator should never remove the cover or attempt to service the product.

Disclaimers

Raymarine does not warrant that this product is error-free or that it is compatible with products manufactured by any person or entity other than Raymarine.

This product uses digital chart data, and electronic information from Global Navigation Satellite Systems (GNSS) which may contain errors. Raymarine does not warrant the accuracy of such information and you are advised that errors in such information may cause the product to malfunction. Raymarine is not responsible for damages or injuries caused by your use or inability to use the product, by the interaction of the product with products manufactured by others, or by errors in chart data or information utilized by the product and supplied by third parties.

This product supports electronic charts provided by third party suppliers which may be embedded or stored on memory card. Use of such charts is subject to the supplier's End-User Licence Agreement.

RF exposure

This equipment complies with FCC / IC RF exposure limits for general population / uncontrolled exposure. The wireless LAN / Bluetooth antenna is mounted behind the front facia of the display. This equipment should be installed and operated with a minimum distance of 1 cm (0.39 in) between the device and the body. This transmitter must not be co-located or operating in conjunction with any other antenna or transmitter, except in accordance with FCC multi-transmitter product procedures.

Compliance Statement (Part 15.19)

This device complies with Part 15 of the FCC Rules. Operation is subject to the following two conditions:

1. This device may not cause harmful interference.
2. This device must accept any interference received, including interference that may cause undesired operation.

FCC Interference Statement (Part 15.105 (b))

This equipment has been tested and found to comply with the limits for a Class B digital device, pursuant to Part 15 of the FCC Rules.

These limits are designed to provide reasonable protection against harmful interference in a residential installation. This equipment generates, uses, and can radiate radio frequency energy and, if not installed and used in accordance with the instructions, may cause harmful interference to radio communications. However, there is no guarantee that interference will not occur in a particular

installation. If this equipment does cause harmful interference to radio or television reception, which can be determined by turning the equipment off and on, the user is encouraged to try to correct the interference by one of the following measures:

1. Reorient or relocate the receiving antenna.
2. Increase the separation between the equipment and receiver.
3. Connect the equipment into an outlet on a circuit different from that to which the receiver is connected.
4. Consult the dealer or an experienced radio / TV technician for help.

Industry Canada

This device complies with Industry Canada License-exempt RSS standard(s).

Operation is subject to the following two conditions:

1. This device may not cause interference; and
2. This device must accept any interference, including interference that may cause undesired operation of the device.

This Class B digital apparatus complies with Canadian ICES-003.

Industry Canada (Français)

Cet appareil est conforme aux normes d'exemption de licence RSS d'Industry Canada.

Son fonctionnement est soumis aux deux conditions suivantes:

1. cet appareil ne doit pas causer d'interférence, et
2. cet appareil doit accepter toute interférence, notamment les interférences qui peuvent affecter son fonctionnement.

Cet appareil numérique de la classe B est conforme à la norme NMB-003 du Canada.

Japanese approvals

In the frequency band used for this device, campus radio stations (radios stations that require a license) and specified low power radio stations (radio stations that do not require license) for mobile identification and amateur radio stations (radio stations that require license) used in industries such as microwave ovens, scientific, medical equipment devices and production line of other factories are also being operated.

1. Before using this device, please make sure that campus radio stations and specified low power radio stations for mobile identification and amateur radio stations are not being operated nearby.
2. In case there is any case of harmful interference to campus radio stations for mobile identification caused by this device, please immediately change the frequency used or stop the transmission of radio waves and then consult about the measures to avoid interference (for example, the installation of partitions) through the contact information below.
3. Besides, when in trouble, such as when there is any case of harmful interference to specified low power radio stations for mobile identification or amateur radio stations caused by this device, please consult through the following contact information.

Contact information: Please contact your local authorized Raymarine dealer.

Declaration of conformity

Raymarine UK Ltd. declares that this product is compliant with the essential requirements of R&TTE directive 1999/5/EC.

The original Declaration of Conformity certificate may be viewed on the relevant product page at www.raymarine.com.

Product disposal

Dispose of this product in accordance with the WEEE Directive.

The Waste Electrical and Electronic Equipment (WEEE) Directive requires the recycling of waste electrical and electronic equipment.

Warranty registration

To register your Raymarine product ownership, please visit www.raymarine.com and register online.

It is important that you register your product to receive full warranty benefits. Your unit package includes a bar code label indicating the serial number of the unit. You will need this serial number when registering your product online. You should retain the label for future reference.

Technical accuracy

To the best of our knowledge, the information in this document was correct at the time it was produced. However, Raymarine cannot accept liability for any inaccuracies or omissions it may contain. In addition, our policy of continuous product improvement may change specifications without notice. As a result, Raymarine cannot accept liability for any differences between the product and this document. Please check the Raymarine website (www.raymarine.com) to ensure you have the most up-to-date version(s) of the documentation for your product.

Chapter 2: Document and product information

Chapter contents

- 2.1 Product documentation on page 14
- 2.2 Applicable products on page 15
- 2.3 Compatible transducers — Axiom™ Pro MFDs on page 16
- 2.4 Parts supplied - Axiom Pro 9 and 12 on page 19
- 2.5 Parts supplied - Axiom Pro 16 on page 20

2.1 Product documentation

The following documentation is applicable to your product:

All documents are available to download as PDFs from www.raymarine.com

Documentation

Description	Part number
Installation instructions (This document)	87319
Surface mounting template	• 9” — 87235 • 12” — 87236 • 16” — 87313
Legacy MFD to Axiom Pro adaptor plates installation instructions	87321
RCR-SDUSB Installation instructions	87317
LightHouse™ 3 Basic operation instructions	81369
LightHouse™ 3 Advanced operation instructions	81370

User manuals Print Shop

Raymarine provides a Print Shop service, enabling you to purchase a high-quality, professionally-printed manual for your Raymarine product.

Printed manuals are ideal for keeping onboard your vessel, as a useful source of reference whenever you need assistance with your Raymarine product.

Visit http://www.raymarine.co.uk/view/?id=5175 to order a printed manual, delivered directly to your door.

For further information about the Print Shop, please visit the Print Shop FAQ pages: http://www.raymarine.co.uk/view/?id=5751.

Note:

- Accepted methods of payment for printed manuals are credit cards and PayPal.
- Printed manuals can be shipped worldwide.
- Further manuals will be added to the Print Shop over the coming months for both new and legacy products.
- Raymarine user manuals are also available to download free-of-charge from the Raymarine website, in the popular PDF format. These PDF files can be viewed on a PC / laptop, tablet, smartphone, or on the latest generation of Raymarine multifunction displays.

LightHouse™ 3 MFD Operation instructions

For operation instructions for your MFD please refer to the LightHouse™ 3 MFD Operation instructions.

	The Basic (81369) and Advanced (81370) LightHouse™ 3 Operation Instructions can be downloaded from the Raymarine website: www.raymarine.com/manuals

2.2 Applicable products

This document is applicable to the following products:

Axiom™ Pro Multifunction Displays

Product number	Name	Description
E70371	Axiom™ Pro 9 RVX	9” MFD with built-in RealVision™ 3D and 1kW sonar module.
E70481	Axiom™ Pro 9 S	9” MFD with built-in 600W sonar module.
E70372	Axiom™ Pro 12 RVX	12” MFD with built-in RealVision™ 3D and 1kW sonar module.
E70482	Axiom™ Pro 12 S	12” MFD with built-in 600W sonar module.
E70373	Axiom™ Pro 16 RVX	16” MFD with built-in RealVision™ 3D and 1kW sonar module.
E70483	Axiom™ Pro 16 S	16” MFD with built-in 600W sonar module.

2.3 Compatible transducers — Axiom™ Pro MFDs

Depending on your MFD variant you can connect the following transducer types directly to your MFD:

Axiom Pro S:

- CPT-S CHIRP conical beam transducers that utilize the 9 pin DownVision™ connector.

Axiom Pro RVX — RV connection:

- RealVision™ 3D transducers.
- DownVision™ transducers.
- Non-CHIRP transducers can be connected using available adaptor cables. Refer to the Raymarine® website for compatible transducers: www.raymarine.com/transducers.

Axiom Pro RVX — X connection:

- 1kW transducers. Refer to the Raymarine® website for compatible transducers: www.raymarine.com/transducers.
- Other transducers using available adaptor cables.

RealVision transducers

The transducers listed below can be connected directly to RealVision™ 3D variant MFDs.

Product number	Transducer	Mounting	Description
A80464	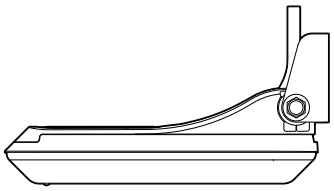	Transom	**RV-100** RealVision™ 3D Plastic Transducer
A80465	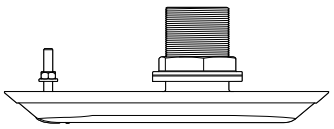	Thru-Hull	**RV-200** RealVision™ 3D Bronze 0° Single Transducer
A80466	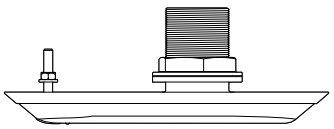	Thru-Hull	**RV-212P** RealVision™ 3D Bronze 12° Split-pair Port Transducer
A80467		Thru-Hull	**RV-212S** RealVision™ 3D Bronze 12° Split-pair Starboard Transducer
A80468	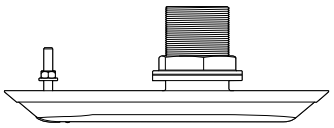	Thru-Hull	**RV-220P** RealVision™ 3D Bronze 20° Split-pair Port Transducer
A80469		Thru-Hull	**RV-220S** RealVision™ 3D Bronze 20° Split-pair Starboard Transducer

DownVision™ transducers

The transducers listed below can be connected directly to DownVision™ (DV) variant MFDs. An adaptor is required for connection to RealVision™ (RV) variant MFDs.

Product number	Transducer	Mounting	Description
A80351	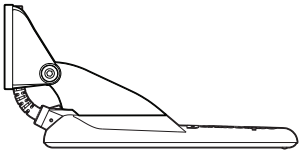	Transom	**CPT-100DVS** plastic (replacement for A80270 CPT-100)
A80277	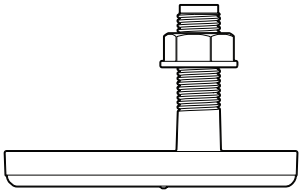	Thru-hull	**CPT-110** plastic
A80271	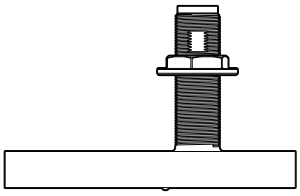	Thru-hull	**CPT-120** bronze

CHIRP conical beam transducers (using DownVision™ type connector)

The transducers listed below can be connected directly to DownVision™ (DV) variant MFDs or via an adaptor cable to RealVision™ (RV), RealVision™ + 1kW (RVX) and Sonar (S) variant MFDs.

CPT-S transducers use CHIRP sonar technology to produce a conical-shaped sonar beam.

Note: CPT-S transducers do NOT offer DownVision™ capabilities.

Product number	Transducer	Mounting	Description
E70342	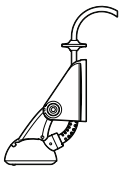	Transom	**CPT-S** plastic
E70339	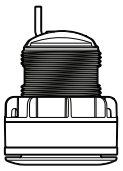	Thru-hull	**CPT-S 0°** angled element plastic
A80448	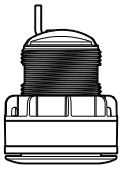	Thru-hull	**CPT-S 12°** angled element plastic
A80447	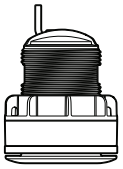	Thru-hull	**CPT-S 20°** angled element plastic
A80446	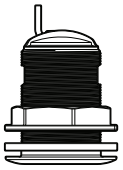	Thru-hull	**CPT-S 0°** angled element bronze

Product number	Transducer	Mounting	Description
E70340	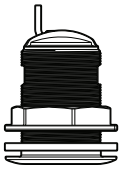	Thru-hull	**CPT-S 12°** angled element bronze
E70341	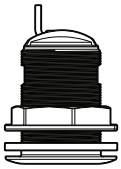	Thru-hull	**CPT-S 20°** angled element bronze

2.4 Parts supplied - Axiom Pro 9 and 12

The parts listed are supplied with the following product numbers: E70371, E70481, E70372 and E70482.

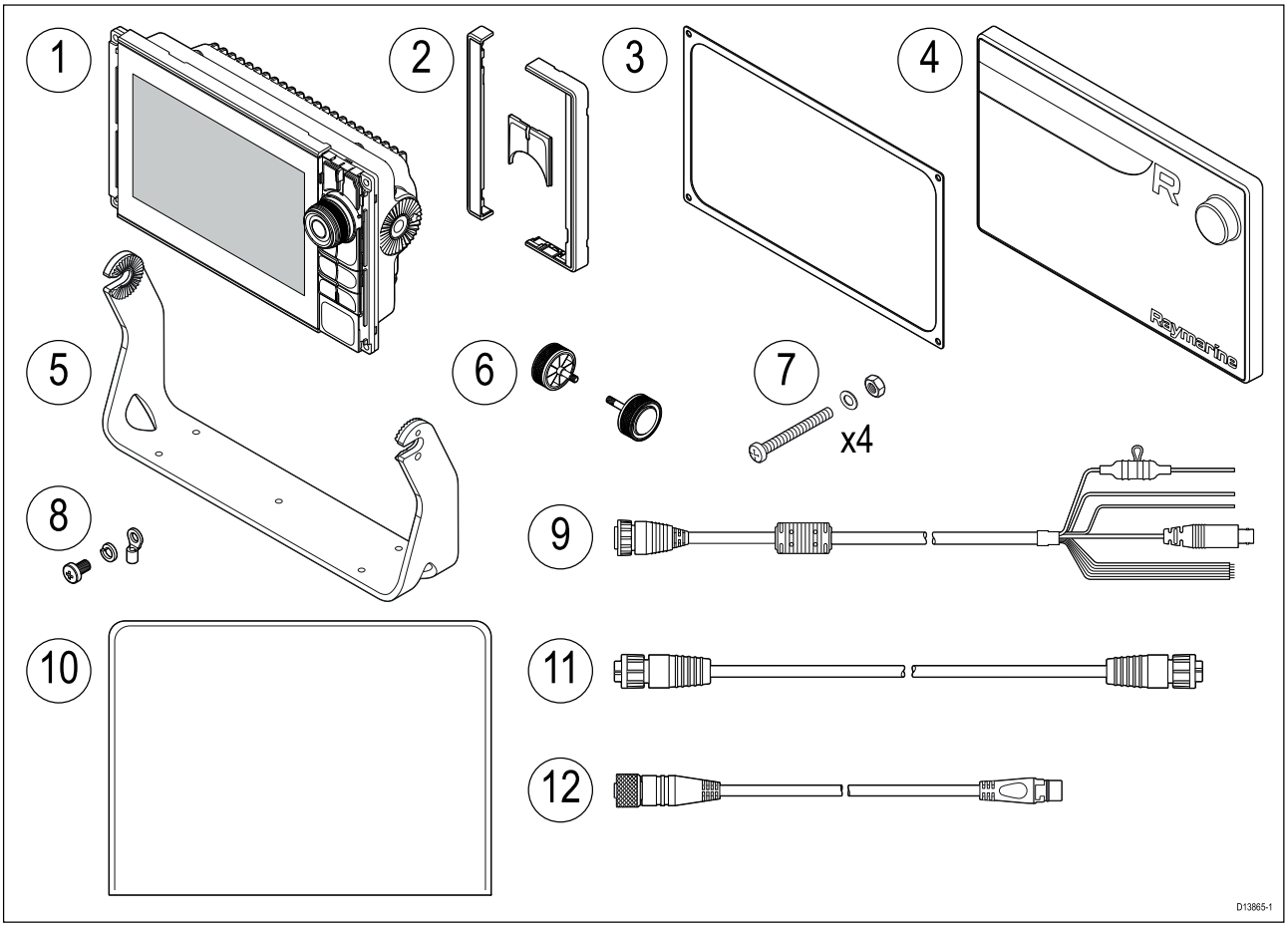

1. Axiom Pro MFD
2. Front bezel pieces and Upper keypad
3. Panel mount gasket
4. Suncover
5. Trunnion bracket
6. Trunnion knobs x 2
7. Fixings (M4 x 40 pan head bolt x 4, M4 Nylock nut x 4 and M4 washer x 4)
8. M3x5 screw, M3 spring washer and M3 crimp terminal (for optional grounding connection)
9. Power/Video/NMEA 0183 cable 1.5 m (4.92 ft) straight
10. Documentation pack
11. RayNet 2 m (6.6 ft) network cable
12. SeaTalkng ™ to DeviceNet adaptor cable

2.5 Parts supplied - Axiom Pro 16

The parts listed are supplied with the following product numbers: E70373 and E70483.

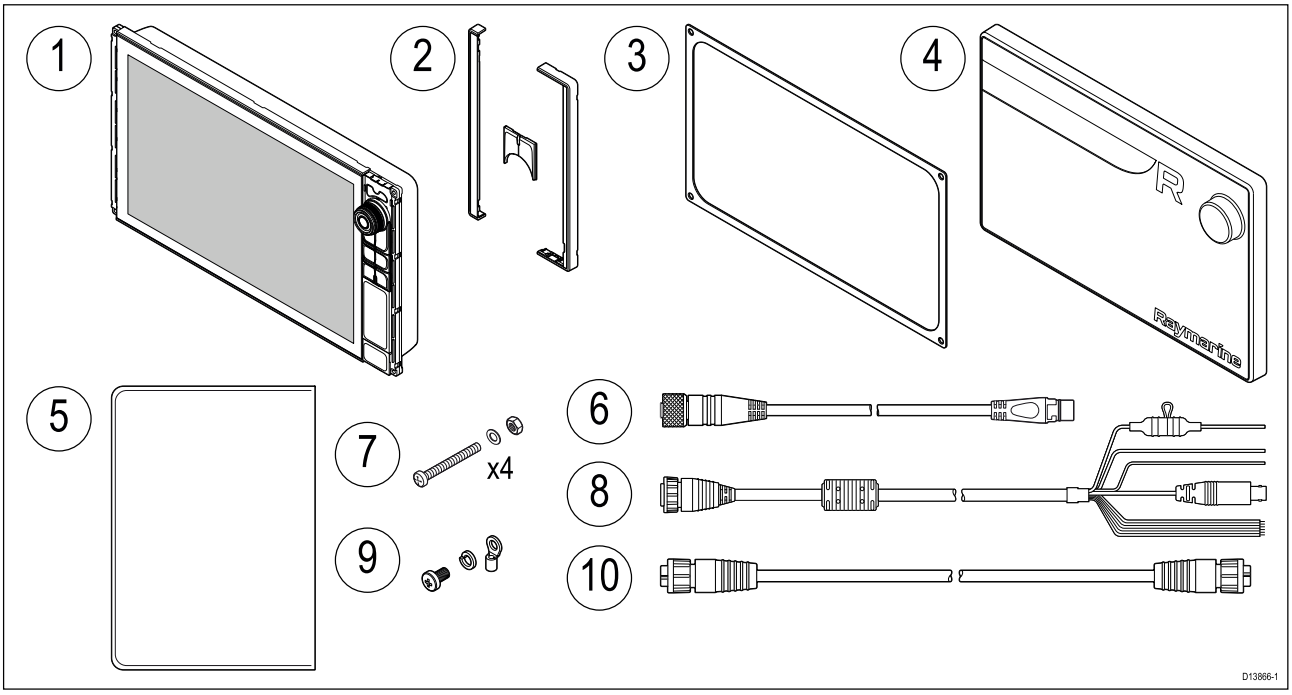

1. Axiom Pro MFD
2. Front bezel pieces and Upper keypad
3. Panel mount gasket
4. Suncover
5. Documentation pack
6. SeaTalkng ™ to DeviceNet adaptor cable
7. Fixings (M4 x 40 pan head bolt x 4, M4 Nylock nut x 4 and M4 washer x 4)
8. Power/Video/NMEA 0183 cable 1.5 m (4.92 ft) straight
9. M3x5 screw, M3 spring washer and M3 crimp terminal (for optional grounding connection)
10. RayNet 2 m (6.6 ft) network cable

Chapter 3: Installation

Chapter contents

- 3.1 Selecting a location on page 22
- 3.2 Mounting options on page 28
- 3.3 Surface mounting on page 29
- 3.4 Bracket (trunnion) mounting on page 31

3.1 Selecting a location

Caution: Mounting surface requirements

This product is heavy. To prevent potential damage to the product and / or your vessel, observe the following BEFORE installing the product:

- Refer to the weight information provided in the technical specification for this product and ensure that the intended mounting surface is suitable for bearing the weight.
- If the mounting surface is not suitable for the product weight, you may need to reinforce the mounting surface.
- If in doubt, refer to a professional marine equipment installer for further guidance.

Warning: Switch off power supply

Ensure the vessel's power supply is switched OFF before starting to install this product. Do NOT connect or disconnect equipment with the power switched on, unless instructed in this document.

Warning: Potential ignition source

This product is NOT approved for use in hazardous/flammable atmospheres. Do NOT install in a hazardous/flammable atmosphere (such as in an engine room or near fuel tanks).

General location requirements

When selecting a location for your product it is important to consider a number of factors.

Key factors which can affect product performance are:

- **Ventilation** — To ensure adequate airflow:
  - Ensure that product is mounted in a compartment of suitable size.
  - Ensure that ventilation holes are not obstructed. Allow adequate separation of all equipment.

  Any specific requirements for each system component are provided later in this chapter.
- **Mounting surface** — Ensure product is adequately supported on a secure surface. Do not mount units or cut holes in places which may damage the structure of the vessel.
- **Cabling** — Ensure the product is mounted in a location which allows proper routing, support and connection of cables:
  - Minimum bend radius of 100 mm (3.94 in) unless otherwise stated.
  - Use cable clips to prevent stress on connectors.
  - If your installation requires multiple ferrites to be added to a cable then additional cable clips should be used to ensure the extra weight of the cable is supported.
- **Water ingress** — The product is suitable for mounting both above and below decks. Although the unit is waterproof, it is good practice to locate it in a protected area away from prolonged and direct exposure to rain and salt spray.
- **Electrical interference** — Select a location that is far enough away from devices that may cause interference, such as motors, generators and radio transmitters / receivers.
- **Power supply** — Select a location that is as close as possible to the vessel's DC power source. This will help to keep cable runs to a minimum.

EMC installation guidelines

Raymarine equipment and accessories conform to the appropriate Electromagnetic Compatibility (EMC) regulations, to minimize electromagnetic interference between equipment and minimize the effect such interference could have on the performance of your system

Correct installation is required to ensure that EMC performance is not compromised.

Note: In areas of extreme EMC interference, some slight interference may be noticed on the product. Where this occurs the product and the source of the interference should be separated by a greater distance.

For **optimum** EMC performance we recommend that wherever possible:

- Raymarine equipment and cables connected to it are:
  - At least 1 m (3 ft) from any equipment transmitting or cables carrying radio signals e.g. VHF radios, cables and antennas. In the case of SSB radios, the distance should be increased to 7 ft (2 m).
  - More than 2 m (7 ft) from the path of a radar beam. A radar beam can normally be assumed to spread 20 degrees above and below the radiating element.
- The product is supplied from a separate battery from that used for engine start. This is important to prevent erratic behavior and data loss which can occur if the engine start does not have a separate battery.
- Raymarine specified cables are used.
- Cables are not cut or extended, unless doing so is detailed in the installation manual.

Note: Where constraints on the installation prevent any of the above recommendations, always ensure the maximum possible separation between different items of electrical equipment, to provide the best conditions for EMC performance throughout the installation

RF interference

Certain third-party external electrical equipment can cause Radio Frequency (RF) interference with GPS, AIS or VHF devices if the external equipment is not adequately insulated and emits excessive levels of electromagnetic interference (EMI).

Some common examples of such external equipment include LED spot or strip lights, and terrestrial TV tuners.

To minimize interference from such equipment:

- Keep it as far away from GPS, AIS or VHF devices as possible.
- Ensure that any power cables for external equipment are not entangled with the power or data cables for GPS, AIS or VHF devices.
- Consider fitting one or more high frequency suppression ferrites to the EMI-emitting device. The ferrite(s) should be rated to be effective in the range 100 MHz to 2.5 GHz, and should be fitted to the power cable and any other cables exiting the EMI-emitting device, as close as possible to the position where the cable exits the device.

Compass safe distance

To prevent potential interference with the vessel's magnetic compasses, ensure an adequate distance is maintained from the product.

When choosing a suitable location for the product you should aim to maintain the maximum possible distance from any compasses. Typically this distance should be at least 1 m (3 ft) in all directions. However for some smaller vessels it may not be possible to locate the product this far away from a compass. In this situation, when choosing the installation location for your product, ensure that the compass is not affected by the product when it is in a powered state.

GPS location requirements

In addition to general guidelines concerning the location of marine electronics, there are a number of environmental factors to consider when installing equipment with an internal GPS antenna.

Mounting location

- **Above Decks (e.g. open air) mounting:**Provides optimal GPS performance. (For equipment with appropriate waterproof rating.)
- **Below Decks (e.g. enclosed space) mounting:**GPS performance may be less effective and may require an external GPS receiver, mounted above decks.

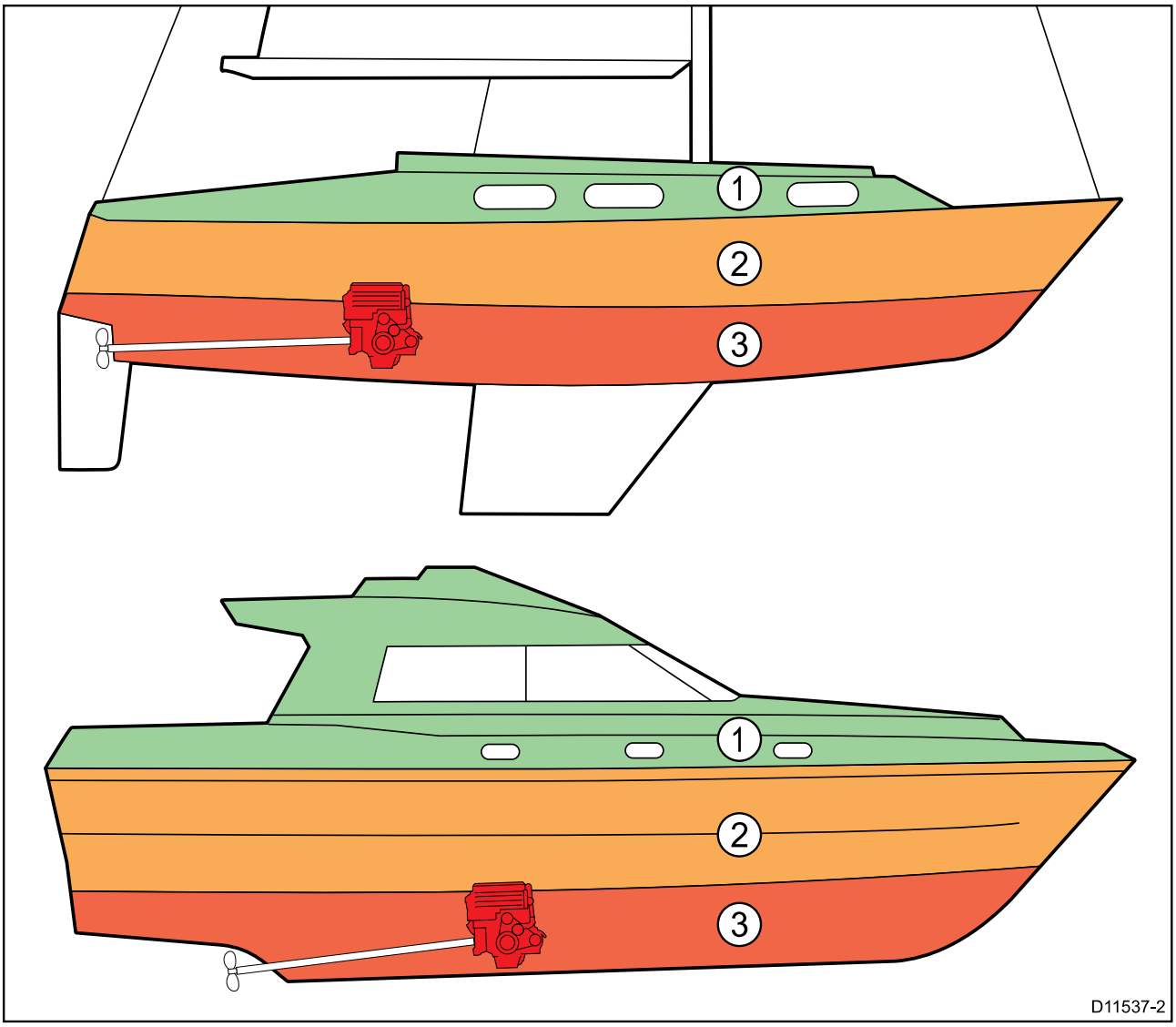

1.		This location provides optimal GPS performance (above decks).
2.		In this location, GPS performance may be less effective.
3.		This location is NOT recommended for GPS antenna.

Vessel construction

The construction of your vessel can have an impact on GPS performance. For example, the proximity of heavy structures such as a structural bulkhead, or the interior of larger vessels may result in a reduced GPS signal. The construction materials can also have an impact. In particular, steel, aluminium or carbon surfaces can impact GPS performance. Before locating equipment with an internal GPS antenna below decks, or on a steel, aluminium or carbon construction vessel or surface, seek professional assistance.

Prevailing conditions

The weather and location of the vessel can affect the GPS performance. Typically calm clear conditions provide for a more accurate GPS fix. Vessels at extreme northerly or southerly latitudes may also receive a weaker GPS signal. GPS antenna mounted below decks will be more susceptible to performance issues related to the prevailing conditions.

Touchscreen location requirements

Touchscreens offer an alternative to using physical buttons to control your display. Full product functionality can be achieved using the Touchscreen.

Note:

Touchscreen performance can be affected by the installation environment, specifically Touchscreen displays installed above decks, where it will be open to the elements may exhibit the following:

- Hot Touchscreen temperature — If the display is mounted where it will be exposed to prolonged periods of direct sunlight, the touchscreen may get very hot.
- Erroneous Touchscreen performance — Exposure to prolonged rain and / or water wash over may cause the display to respond to 'false touches', caused by the rain/water hitting the screen.

If, due to the required installation location, exposure to these elements is anticipated then it is recommended that you consider:

- locking the Touchscreen and using the physical buttons instead — HybridTouch displays
- attaching a third-party 'display hood accessory' to reduce direct sunlight exposure and the volume of water that the display is exposed to.
- installing a remote keypad such as the RMK-9 and operating the display remotely — Touch-only displays
- upgrading to a HybridTouch display and using the physical buttons instead — Touch-only displays

Wi-Fi location requirements

A number of factors can influence Wi-Fi performance, it is important to ensure you test the Wi-Fi performance, at the desired location before installing Wi-Fi enabled products.

Distance and signal strength

The distance between Wi-Fi products should always be kept to a minimum. Do not exceed the maximum stated range of your Wi-Fi product (Maximum range will vary for each device).

Wi-Fi performance degrades over distance so products farther away will receive less network bandwidth. Products installed close to their maximum Wi-Fi range may experience slow connection speeds, signal drop outs or not being able to connect at all.

Line of sight and obstacles

For best results the Wi-Fi product should have a clear, direct line of sight to the product it will be connected to. Any physical obstructions can degrade or even block the Wi-Fi signal.

The construction of your vessel can also have an impact on Wi-Fi performance. For example, metal structural bulkheads and roofing will reduce and in certain situations, block the Wi-Fi signal.

If the Wi-Fi signal passes through a bulkhead containing power cables this can also degrade Wi-Fi performance.

Reflective surfaces such as metal surfaces, some types of glass and even mirrors can drastically effect performance or even block the Wi-Fi signal.

Interference and other equipment

Wi-Fi products should be installed at least 1m (3 ft) away from:

- other Wi-Fi enabled products
- transmitting products that send wireless signals in the same frequency range
- other electrical, electronic or electromagnetic equipment that may generate interference

Interference from other peoples Wi-Fi products can also cause interference with your products. You can use a Wi-Fi analyzer tool to assess the best Wi-Fi channel (channel not in use or used by least amount of devices) for you to use.

Viewing angle considerations

As display contrast and color are affected by the viewing angle, It is recommended that you temporarily power up the display, prior to installation, to enable you to best judge which location provides the optimum viewing angle.

Refer to Chapter 8 **Technical specification** for viewing angles for your product.

Product dimensions

Axiom Pro 9 and 12 dimensions

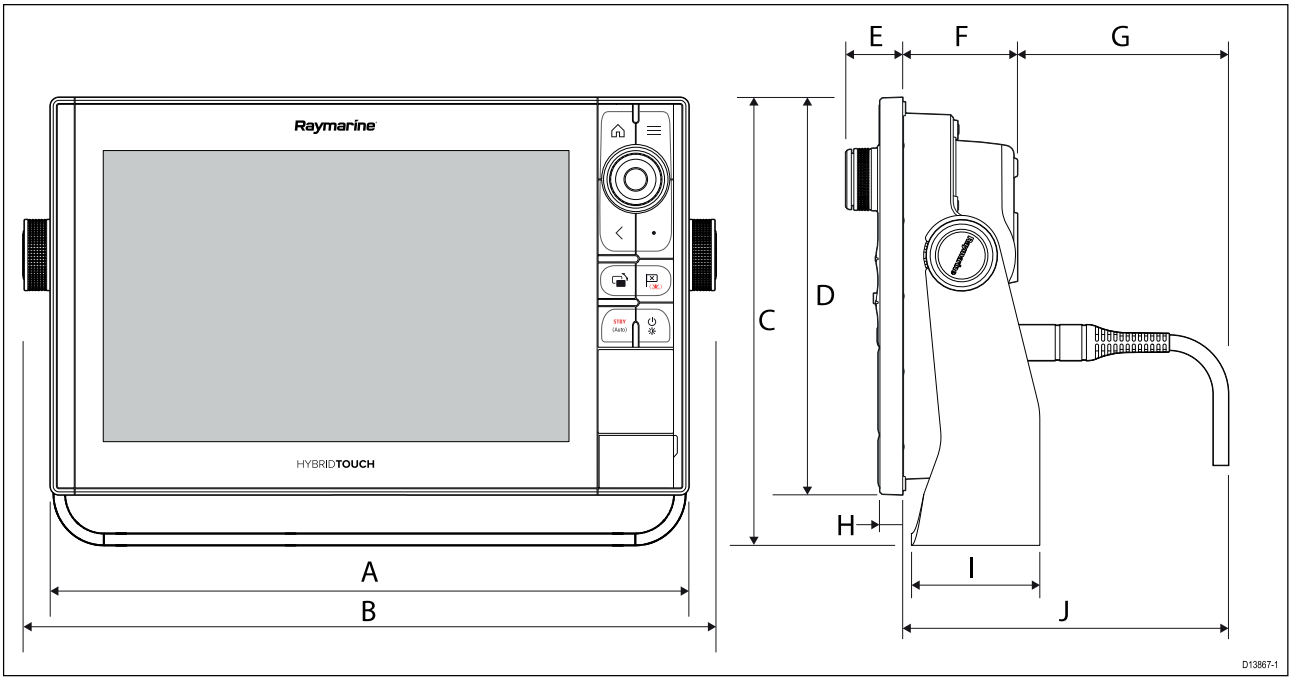

	Axiom Pro 9	Axiom Pro 12
A	299.32 mm (11.78 in)	358.03 mm (14.1 in)
B	329.5 mm (12.97 in)	388.5 mm (15.3 in)
C	186.2 mm (7.33 in)	246.13 mm (9.69 in)
D	173.79 mm (6.84 in)	222.8 mm (8.77 in)
E	33.4 mm (1.31 in)	31.9 mm (1.26 in)
F	64.5 mm (2.54 in)	64.4 mm (2.54 in)
G	137.05 mm (5.4 in) straight connector 117.05 mm (4.61 in) right angled connector	137.1 mm (5.4 in) straight connector 117.1 mm (4.61 in) right angled connector
H	12.86 mm (0.51 in)	12.86 mm (0.51 in)
I	84 mm (3.31 in)	89 mm (3.50 in)
J	201.5 mm (7.93 in) straight connector 181.5 mm (7.15 in) right angled connector	201.5 mm (7.93 in) straight connector 181.5 mm (7.15 in) right angled connector

Axiom Pro 16 dimensions

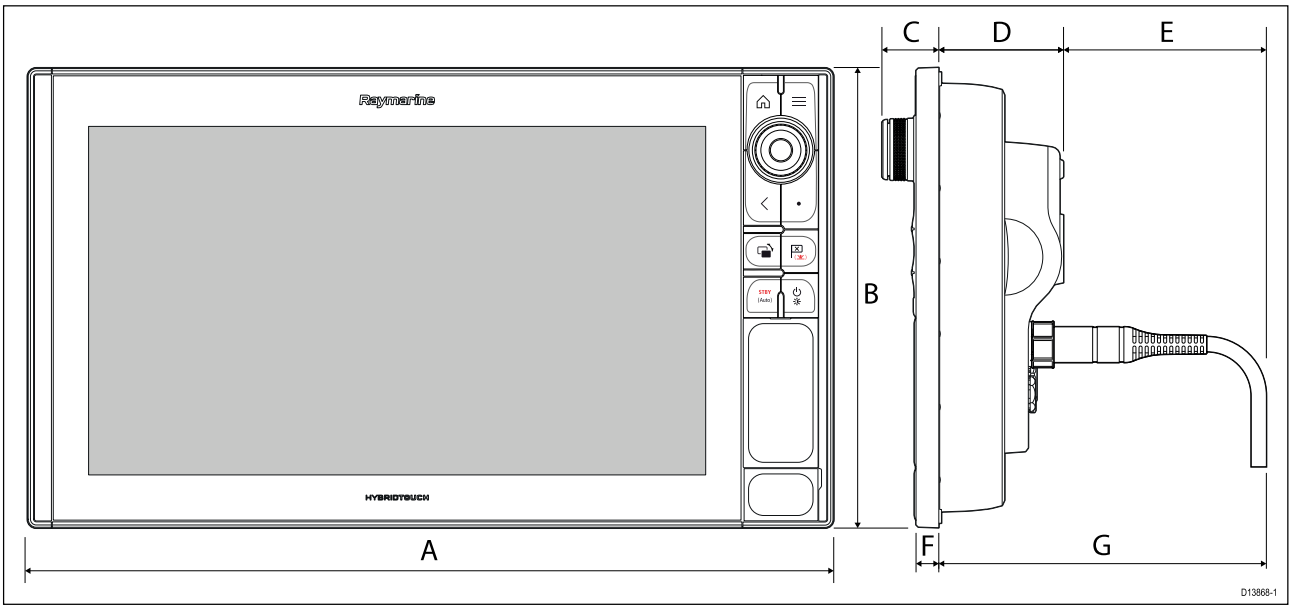

A	452.02 mm (17.8 in)
B	258 mm (10.16 in)
C	33.4 mm (1.31 in)
D	68.4 mm (2.69 in)
E	138.6 mm (5.46 in) straight connector 118.6 mm (4.67 in) right angled connector
F	15.2 mm (0.6 in)
G	207 mm (8.15 in) straight connector 187 mm (7.36 in) right angled connector

3.2 Mounting options

Axiom Pro 9, 12, and 16 can be surface mounted. The Axiom Pro 9 and 12 can also be bracket mounted on a trunnion.

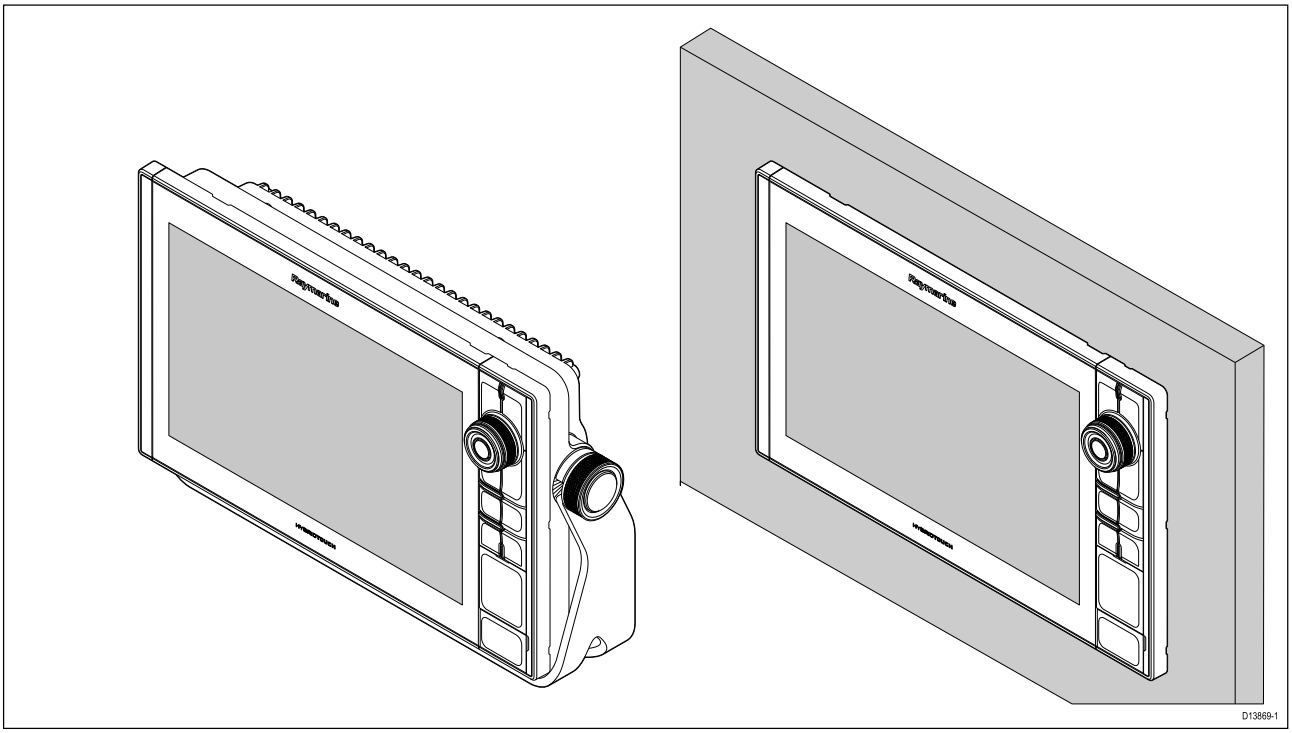

Legacy MFD adaptor plates are also available to enable you to easily swap out older MFDs for new Axiom Pro MFDs, please refer to Chapter 9 **Spares and accessories** for a list of available adaptors.

3.3 Surface mounting

The MFD can be surface mounted.

Before mounting the unit, ensure that you have:

- Selected a suitable location.
- Identified the cable connections and route that the cables will take.
- Detached the Menu/Home buttons keypad.
- Detached the front screw covers.

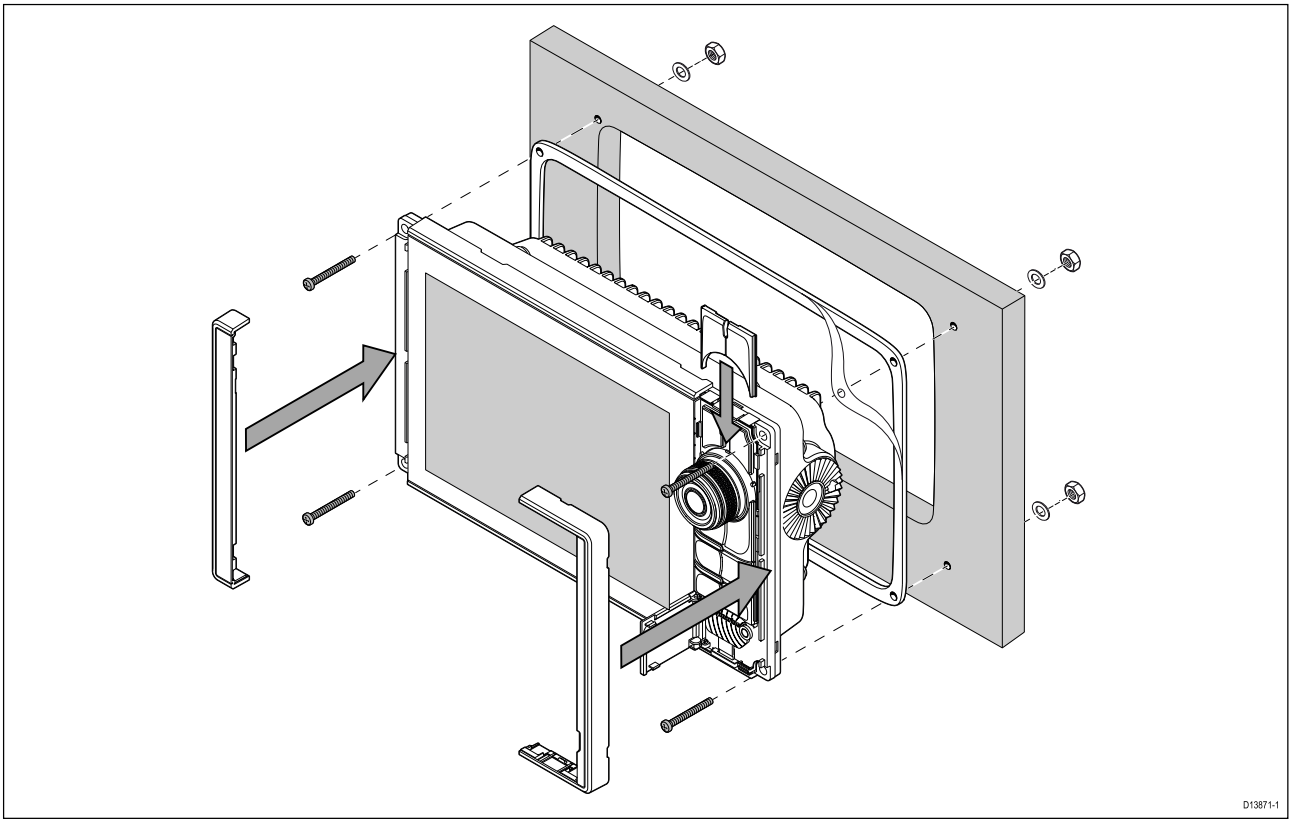

1. Check the chosen mounting location. A clear, flat area with suitable clearance behind the panel is required.
2. Fix the supplied mounting template to the chosen location using masking or self-adhesive tape.
3. Using a suitable hole saw (the size is indicated on the template), make a hole in each corner of the cut-out area.
4. Using a suitable saw, cut along the inside edge of the cut-out line.
5. Ensure that the unit fits into the removed area and then file around any rough edges until smooth.
6. Drill 4 holes as indicated on the template to accept the fixings.
7. Place the gasket onto the rear of the display and press firmly onto the flange.
8. Connect the power, data and other cables to the MFD.
9. Slide the unit into place and secure using the fixings provided.
10. Attach the Menu/Home buttons keypad, by sliding it down from above the MFD.
11. Attach the bezel pieces to either side of the MFD.

Note: The supplied gasket provides a seal between the unit and a suitably flat and stiff mounting surface or binnacle. The gasket should be used in all installations. It may also be necessary to use a marine-grade sealant if the mounting surface or binnacle is not entirely flat and stiff or has a rough surface finish.

Fitting the Menu-Home button

Follow the steps below to fit the Menu/Home button.

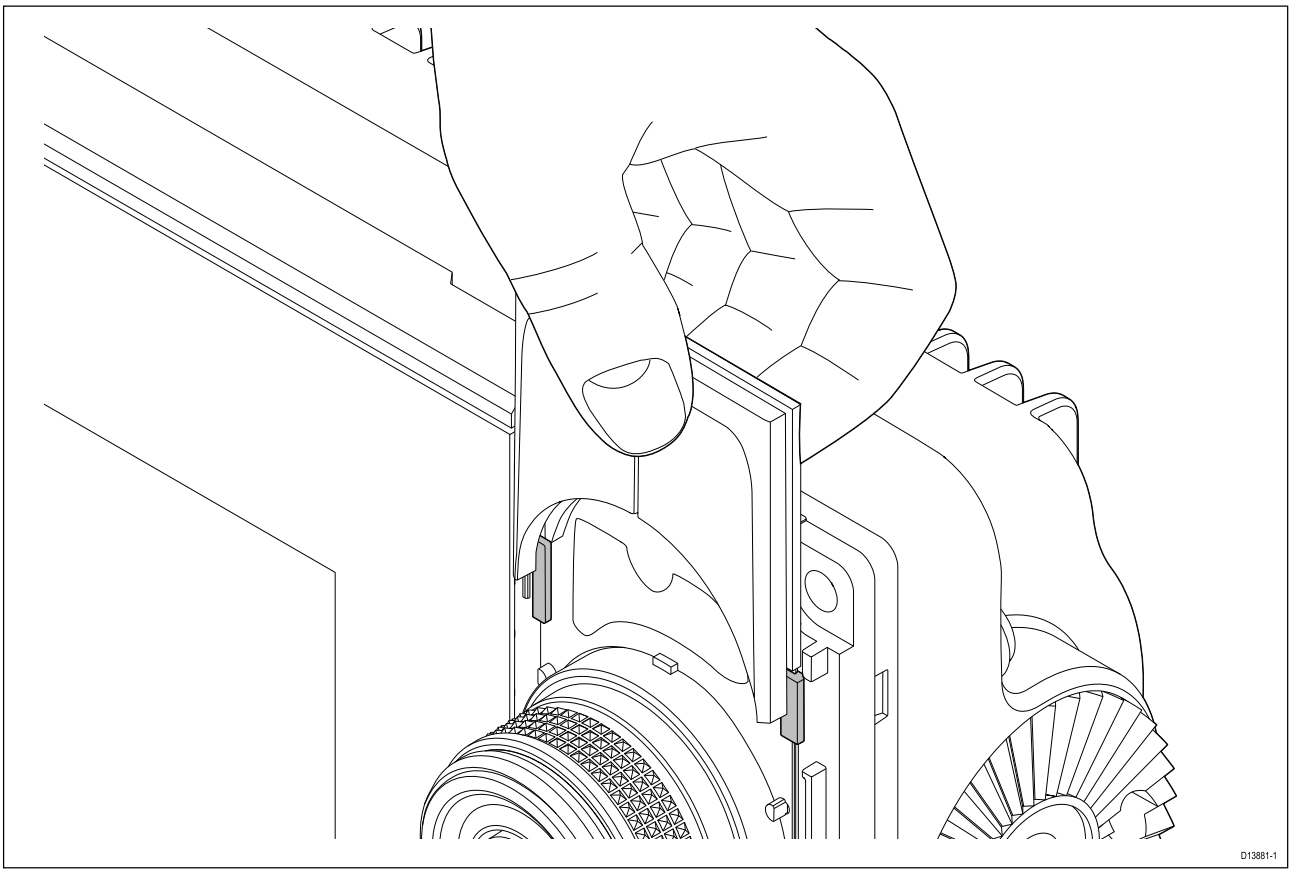

1. Slide the backing plate behind the locating tabs as shown below.

Removing the bezel pieces

If you need to remove the MFD once installed then the bezel pieces will need to be removed to gain access to the fixings.

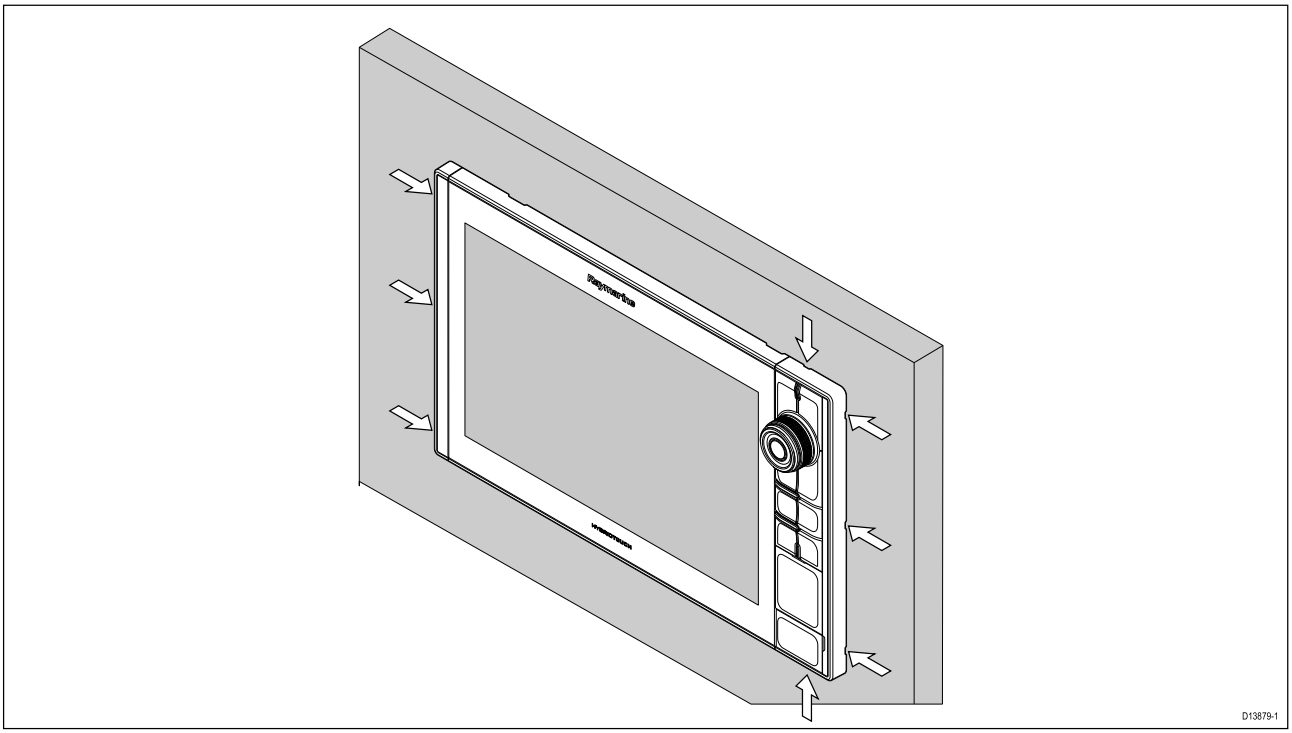

1. Carefully insert the tip of a small flat blade screw driver into the recessed areas around the edge of the bezel pieces.
2. Gently lever the screw driver to push the bezel piece forward, away from the display.

The bezel piece should now come away from the display easily.

3.4 Bracket (trunnion) mounting

Axiom Pro 9 and 12 MFDs can be mounted on the supplied trunnion bracket. The bracket can be used to mount your MFD on a horizontal surface.

Ensure you have chosen a suitable mounting location for your MFD, with sufficient head room to allow the MFD's angle to be adjusted or the MFD to be removed if necessary. If installing 'above head' take extra care to ensure the knobs are tightened sufficiently to prevent them coming undone due to vibration when underway.

Before mounting the unit ensure that you have:

- Sourced adequate fixings to secure the bracket to your mounting surface.
- Attached the Menu/Home buttons and bezel pieces.

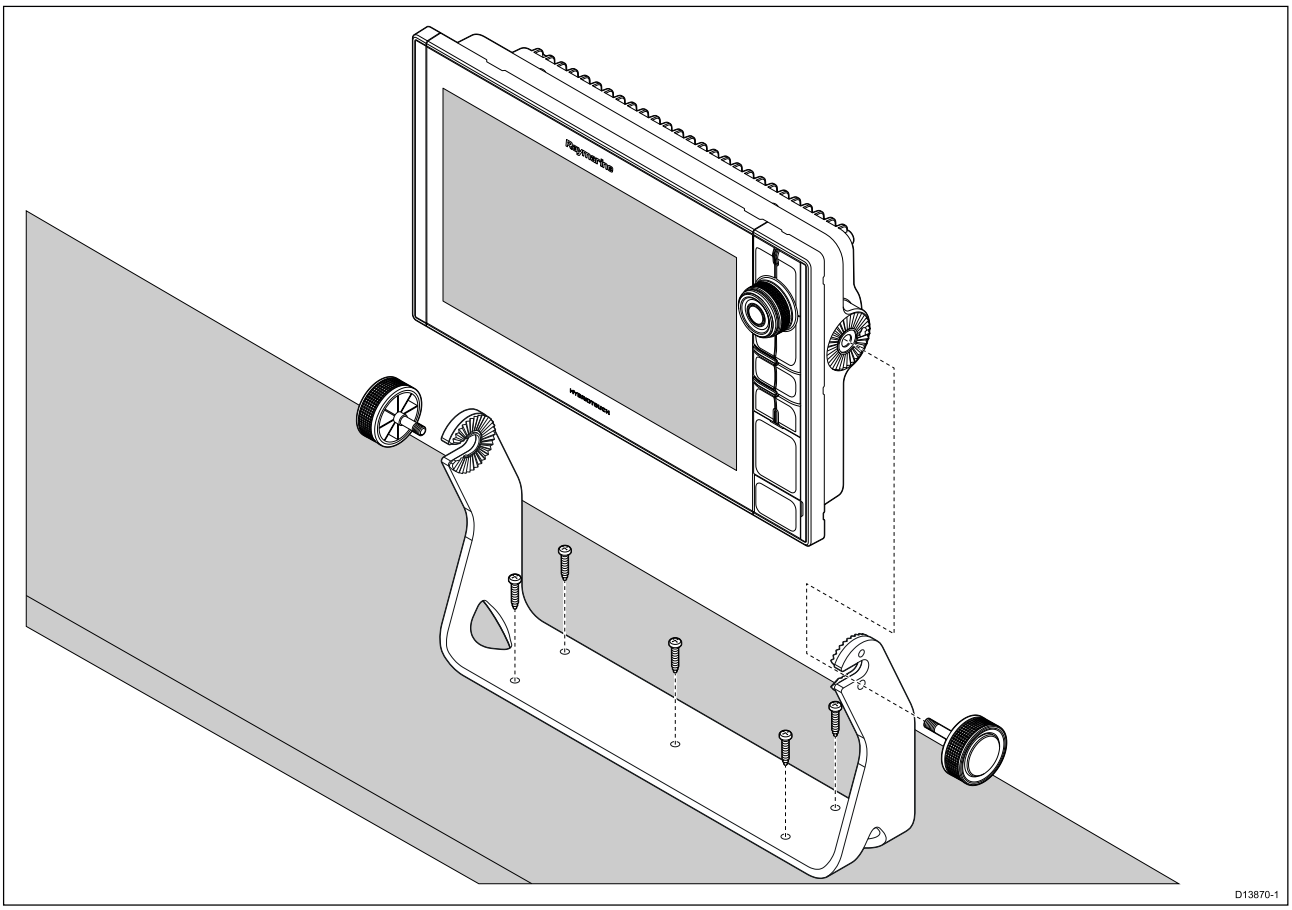

1. Using the Bracket as a template, Mark and drill 5 x pilot holes on the mounting surface.
2. Use self tapping screws to secure the trunnion bracket to the mounting surface.

   If the mounting surface is too thin for the screws provided, use stainless steel machine screws, washers and locking nuts, alternatively reinforce the rear of the mounting surface.

3. Using the bracket knobs, secure the MFD to the Bracket, ensuring the ratchet teeth are correctly engaged.

   The knobs should be tightened by hand, sufficiently to prevent the MFD from moving whilst your vessel is underway.

4. Route and connect necessary cables.

Chapter 4: Connections

Chapter contents

- 4.1 Connections overview on page 34
- 4.2 Power connection on page 37
- 4.3 NMEA 2000 (SeaTalkng ®) connection on page 42
- 4.4 NMEA 0183 connection on page 43
- 4.5 Transducer connection on page 44
- 4.6 Network connection on page 46
- 4.7 GA150 connection on page 47
- 4.8 Accessory connection on page 48
- 4.9 Analog video connection on page 49

4.1 Connections overview

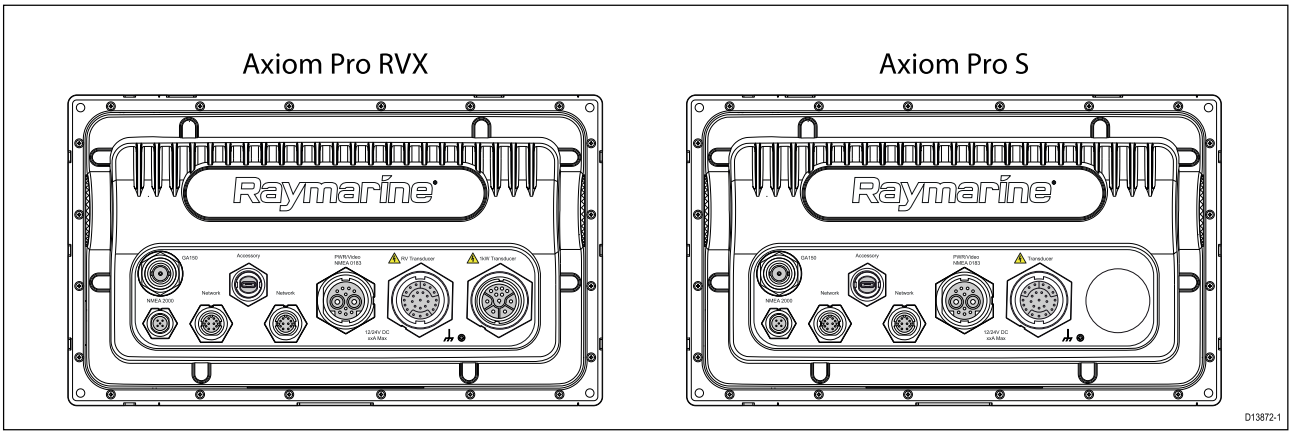

Axiom Pro connection options

Connector	Connector	Connects to:	Suitable cables
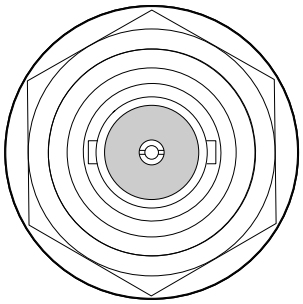	GA150 connection	GA150 antenna	GA150's fitted cable
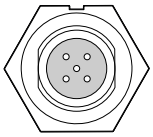	NMEA 2000 connection	• SeaTalkng ® backbone • NMEA 2000 backbone	• SeaTalkng ® to DeviceNet adaptor cable • DeviceNet cables
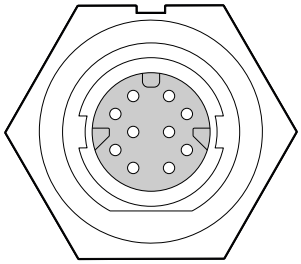	Network connection (x 2)	RayNet network or device	RayNet cable with female connector
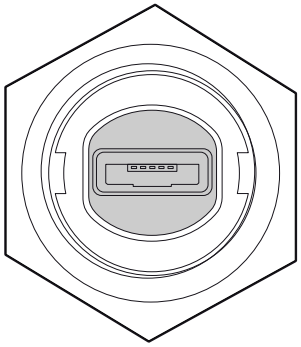	Accessory connection	• RCR-SDUSB remote card reader • RCR-2 remote card reader	RCR-SDUSB/RCR-2's fitted cable

Connector	Connector	Connects to:	Suitable cables
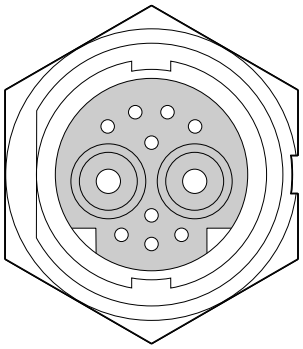	Power / Video out / NMEA 0183 connection	12/24 V DC power supply / Video input / NMEA 0183	Power/Video/0183 cable
	Optional grounding point	Vessel RF ground, or negative battery terminal	Refer to **Grounding — optional dedicated drain wire** section for details

Depending on MFD variant different transducer connections are available

Axiom Pro RVX — transducer connection options

Connector	Connects to:	Suitable cables
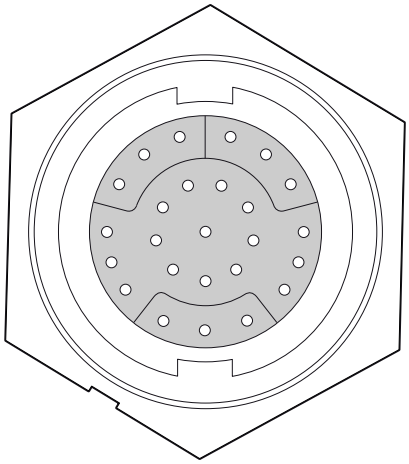	RealVision™ 3D transducers	• Transducer's fitted cable • Extension cable • Adaptor cable
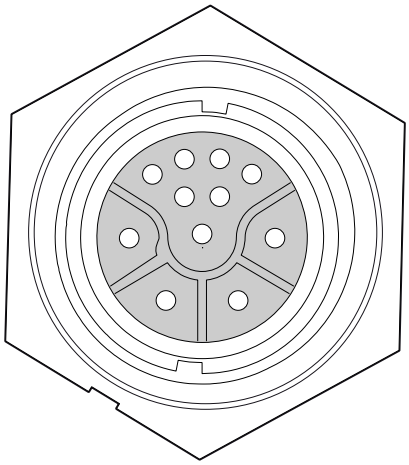	1kW transducers	• Transducer's fitted cable • Extension cable • Adaptor cable

Axiom Pro S — transducer connection options

Connector	Connects to:	Suitable cables
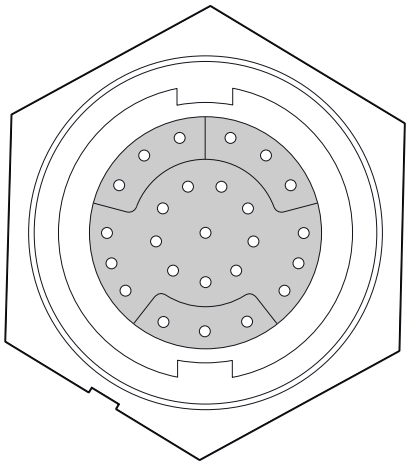	CPT-S transducers via adaptor cables.	• Adaptor cables

Note:

Refer to Chapter 9 Spares and Accessories for available cables.

Connecting cables

Follow the steps below to connect the cable(s) to your product.

1. Ensure that the vessel's power supply is switched off.
2. Ensure that the device being connected has been installed in accordance with the installation instructions supplied with that device.
3. Ensuring correct orientation, push cable connectors fully onto the corresponding connectors.
4. If applicable, engage any locking mechanism to ensure a secure connection.
5. Ensure any bare ended wire connections are suitably insulated to prevent corrosion due to water ingress.

4.2 Power connection

The power cable must be connected to a 12 or 24 V dc power supply, this can be achieved by connecting directly to a battery, or via a distribution panel. The product is protected against reverse polarity.

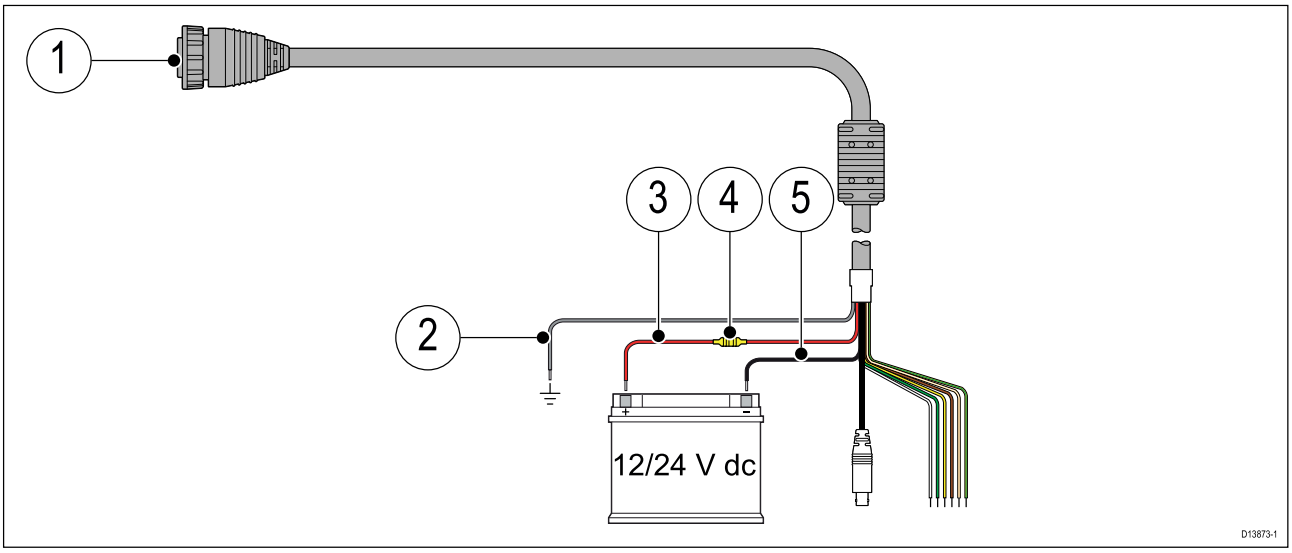

1. Power/Video/NMEA 0183 cable connects to the rear of the MFD.
2. Ground wire connects to RF ground point, if no ground point is available connect to the battery negative (-) terminal.
3. Positive (Red) wire connects to battery positive (+) terminal.
4. Fuse.
5. Negative wire connects to battery negative (-) terminal.

In-line fuse and thermal breaker ratings

The following in-line fuse and thermal breaker ratings apply to your product:

In-line fuse rating	Thermal breaker rating
15 A	15 A (if only connecting one device)

Note:

- The suitable fuse rating for the thermal breaker is dependent on the number of devices you are connecting. If in doubt consult an authorized Raymarine dealer.
- Your product's power cable may have fitted in-line fuse, if not then you can add an in-line fuse to the positive wire of your products power connection.

Caution: Power supply protection

When installing this product ensure the power source is adequately protected by means of a suitably-rated fuse or automatic circuit breaker.

Power distribution

Recommendations and best practice.

- The product is supplied with a power cable. Only use the power cable supplied with the product. Do NOT use a power cable designed for, or supplied with, a different product.
- Refer to the *Power connection* section for more information on how to identify the wires in your product's power cable, and where to connect them.
- See below for more information on implementation for some common power distribution scenarios.

Important:

When planning and wiring, take into consideration other products in your system, some of which (e.g. sonar modules) may place large power demand peaks on the vessel's electrical system.

Note:

The information provided below is for guidance only, to help protect your product. It covers common vessel power arrangements, but does NOT cover every scenario. If you are unsure how to provide the correct level of protection, please consult an authorized Raymarine dealer or a suitably qualified professional marine electrician.

Implementation — direct connection to battery

- The power cable supplied with your product may be connected directly to the vessel's battery, via a suitably rated fuse or breaker.
- The power cable supplied with your product may NOT include a separate drain wire. If this is the case, only the power cable's red and black wires need to be connected.
- If the supplied power cable is NOT fitted with an inline fuse, you MUST fit a suitably rated fuse or breaker between the red wire and the battery's positive terminal.
- Refer to the inline fuse ratings provided in the product's documentation.
- If you need to extend the length of the power cable supplied with your product, ensure you observe the dedicated *Power cable extensions* advice provided in the product's documentation.

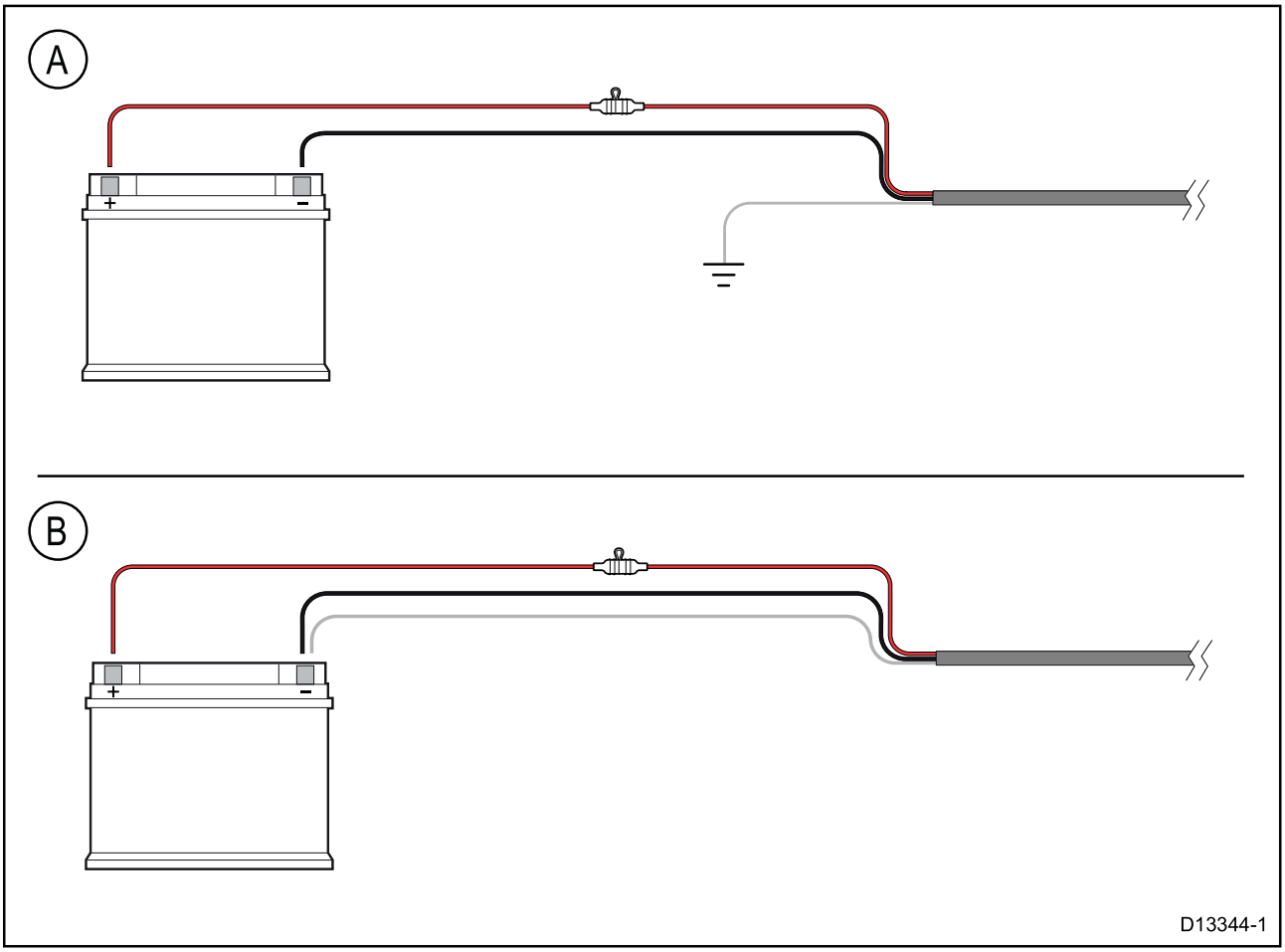

A	Battery connection scenario A: suitable for a vessel with a common RF ground point. In this scenario, if your product's power cable is supplied with a separate drain wire then it should be connected to the vessel's common ground point.
B	Battery connection scenario B: suitable for a vessel without a common grounding point. In this case, if your product's power cable is supplied with a separate drain wire then it should be connected directly to the battery's negative terminal.

Implementation — connection to distribution panel

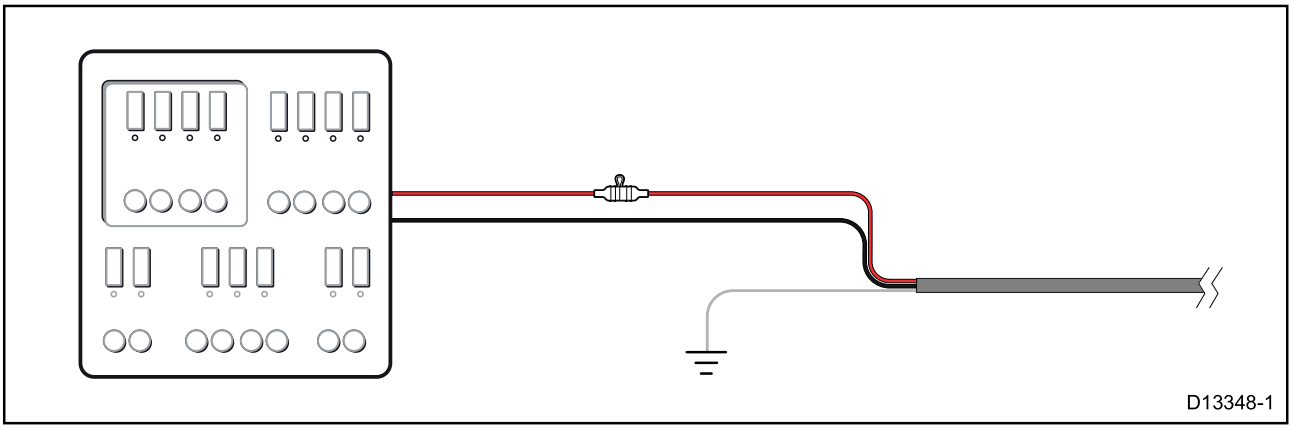

- Alternatively, the supplied power cable may be connected to a suitable breaker or switch on the vessel's distribution panel or factory-fitted power distribution point.
- The distribution point should be fed from the vessel's primary power source by 8 AWG (8.36 mm^2) cable.
- Ideally, all equipment should be wired to individual suitably-rated thermal breakers or fuses, with appropriate circuit protection. Where this is not possible and more than 1 item of equipment shares a breaker, use individual in-line fuses for each power circuit to provide the necessary protection.

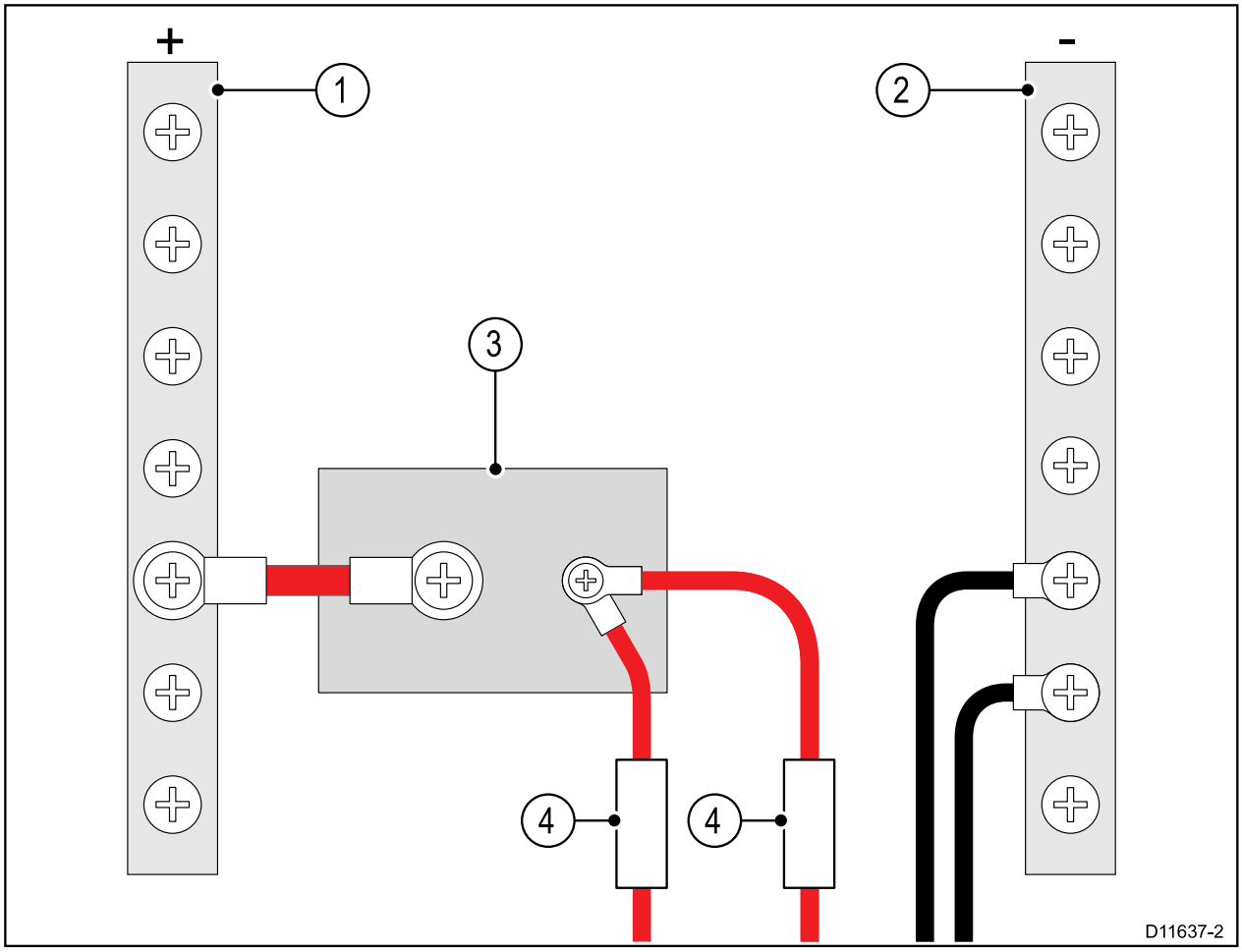

1	Positive (+) bar
2	Negative (-) bar
3	Circuit breaker
4	Fuse

- In all cases, observe the recommended breaker / fuse ratings provided in the product's documentation.

Important:

Be aware that the suitable fuse rating for the thermal breaker or fuse is dependent on the number of devices you are connecting.

Power cable extension

If you need to extend the length of the power cable supplied with your product, ensure you observe the following advice:

- The power cable for each unit in your system should be run as a separate, single length of 2-wire cable from the unit to the vessel's battery or distribution panel.
- For power cable extensions, it is recommended that a **minimum** wire gauge of 16 AWG (1.31 mm^2). For cable runs longer than 15 meters, you may need to consider a thicker wire gauge (e.g. 14 AWG (2.08 mm^2), or 12 AWG (3.31 mm^2)).
- An important requirement for all lengths of power cable (including any extension) is to ensure that there is a continuous **minimum** voltage of 10.8 V at the product's power connector, with a fully flat battery at 11 V.

Important: Be aware that some products in your system (such as sonar modules) can create voltage peaks at certain times, which may impact the voltage available to other products during the peaks.

Grounding

Ensure that you observe the separate grounding advice provided in the product's documentation.

More information

It is recommended that best practice is observed in all vessel electrical installations, as detailed in the following standards:

- BMEA Code of Practice for Electrical and Electronic Installations in Boats
- NMEA 0400 Installation Standard
- ABYC E-11 AC & DC Electrical Systems on Boats
- ABYC A-31 Battery chargers and Inverters
- ABYC TE-4 Lightning Protection

Warning: Product grounding

Before applying power to this product, ensure it has been correctly grounded, in accordance with the instructions provided.

Warning: Positive ground systems

Do not connect this unit to a system which has positive grounding.

Grounding — optional dedicated drain wire

Frequencies emitted from equipment such as switch mode power supplies or MF/HF transmitters etc. can cause interference with your MFD's touchscreen. If you experience issues with touchscreen performance, fitting an additional dedicated drain wire can resolve the issue.

Note:

The additional wire supplements the drain wire (shield) that is part of the product's power cable and should ONLY be used when touchscreen interference is observed.

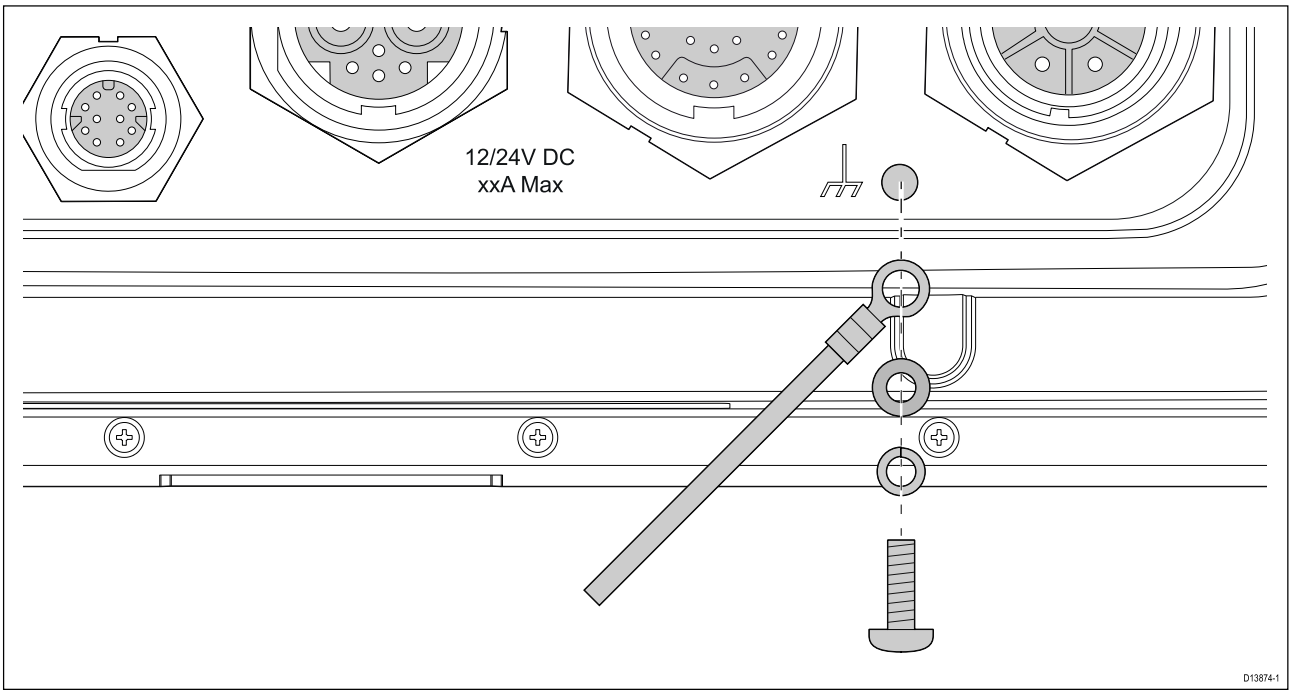

Connect one end of the additional drain wire (not supplied) to your product.

Connect the other end of the additional drain wire to the same point as the power cable drain wire (shield). This will be either the vessel's RF ground point, or on vessels without an RF ground system, the negative battery terminal.

The dc power system should be either:

- Negative grounded, with the negative battery terminal connected to the vessel's ground; or
- Floating, with neither battery terminal connected to the vessel's ground.

If several items require grounding, they may first be connected to a single local point (e.g. within a switch panel), with this point connected via a single, appropriately-rated conductor, to the vessel's common RF ground point.

Implementation

The preferred minimum requirement for the path to ground is via a flat tinned copper braid, with a 30 A rating (1/4 inch) or greater. If this is not possible, an equivalent stranded wire conductor may be used, rated as follows:

- for runs of <1 m (3 ft), use 6 mm^2 (#10 AWG) or greater.
- for runs of >1 m (3 ft), use 8 mm^2 (#8 AWG) or greater.

In any grounding system, always keep the length of connecting braid or wires as short as possible.

References

- ISO10133/13297
- BMEA code of practice
- NMEA 0400

4.3 NMEA 2000 (SeaTalkng ®) connection

The MFD can transmit and receive data from devices connected on a compliant CAN bus network. The MFD is connected to the backbone using the MFD's NMEA 2000 connector.

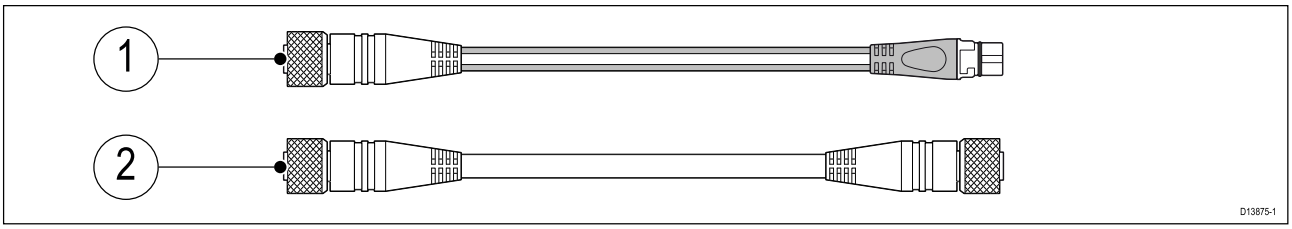

1. Use the supplied DeviceNet to SeaTalkng ® adaptor cable to connect your MFD to a SeaTalkng ® backbone.
2. Alternatively your can connect your MFD to a NMEA 2000 backbone using a standard DeviceNet cable (not supplied).

Note:

1. SeaTalkng ® and NMEA 2000 devices must be connected to a correctly terminated backbone that the MFD is also connected to. Devices cannot be connected directly to the MFD.
2. Refer to the instructions supplied with your SeaTalkng ® / NMEA 2000 device for details on creating a backbone.

4.4 NMEA 0183 connection

NMEA 0183 devices can be connected to your MFD using the NMEA 0183 wires on the supplied Power/Video/NMEA 0183 cable.

2 NMEA 0183 ports are available:

- **Port 1**: Input and output 4,800 or 38,400 baud rate.
- **Port 2**: Input only 4,800 or 38,400 baud rate.

Note:

- The Baud rate for each port must be set in your MFD's settings, refer to the operation instructions for your MFD for details on specifying baud rate.
- For Port 1, both the input and output communicate at the same baud rate. For example, if you have one NMEA 0183 device connected to Port 1 INPUT, and another NMEA 0183 device connected to Port 1 OUTPUT, both NMEA devices must use the same baud rate.

Up to 4 devices can be connected to the display's output port and up to 2 devices to the display's input ports.

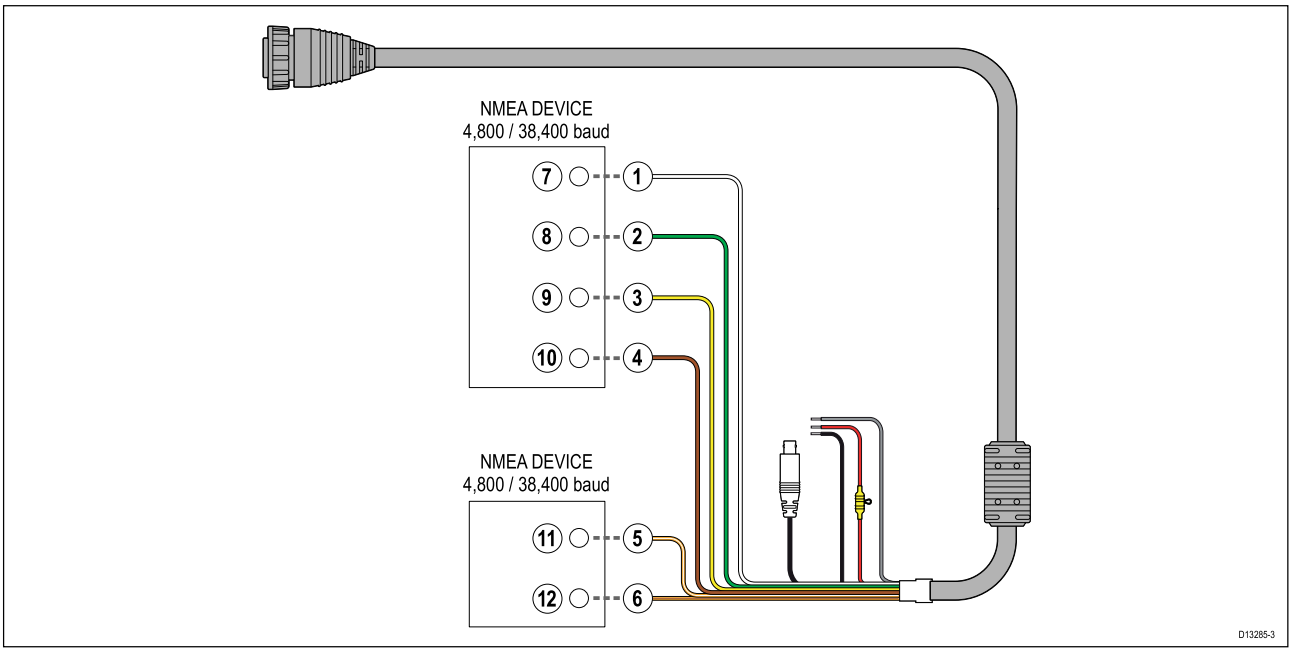

Item	Device	Cable color	Port	Input / output	Positive (+) / negative (-)
1	MFD	White	1	Input	Positive
2		Green	1	Input	Negative
3		Yellow	1	Output	Positive
4		Brown	1	Output	Negative
5		Orange / White	2	Input	Positive
6		Orange / Green	2	Input	Negative
7	NMEA device	*	*	Output	Positive
8		*	*	Output	Negative
9		*	*	Input	Positive
10		*	*	Input	Negative
11	NMEA device	*	*	Output	Positive
12		*	*	Output	Negative

Note:

* Refer to instructions provided with your NMEA 0183 device for connection details.

4.5 Transducer connection

If your MFD includes a built-in sonar module then you can connect a transducer to your MFD.

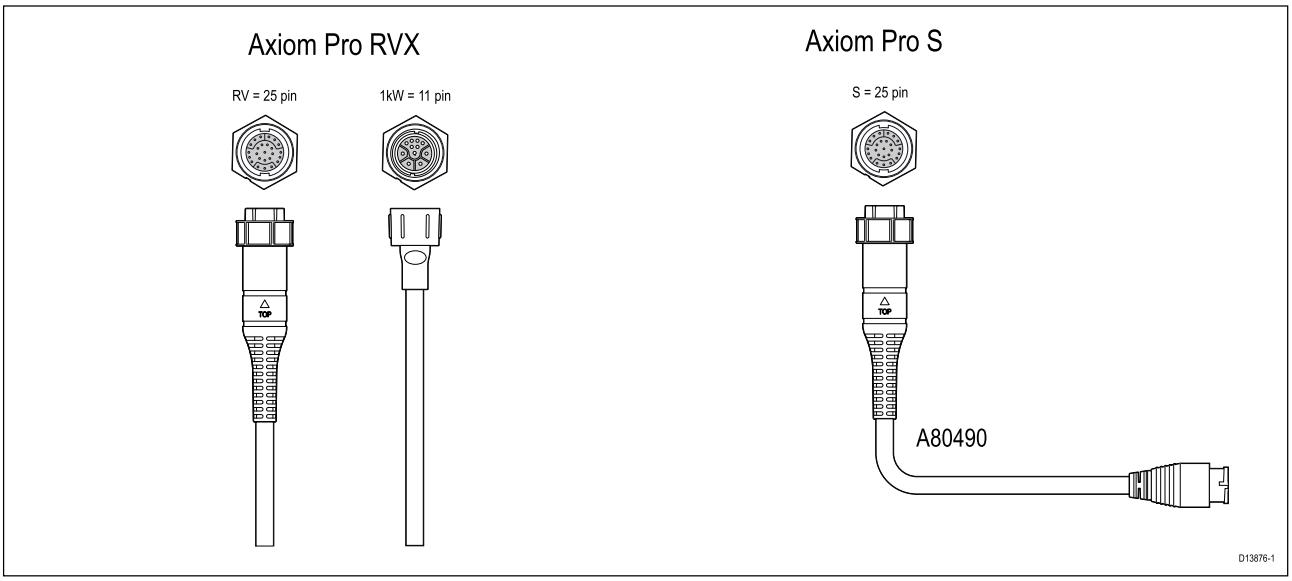

- Axiom Pro RVX:
  - 1 x 25 pin connector — connect to RealVision™ 3D transducers
  - 1 x 11 pin connector — connect to 1kW transducers.
- Axiom Pro S
  - 1 x 25 pin connector — connect to transducer adaptor cable A80490, the adaptor cable then connects to a CPT-S series transducer.

Note:

1. Only CPT-S series transducers can be connected to Axiom Pro S variant MFDs.
2. Transducer extension cables are available.
3. Adaptor cables are also available that enable connection of different transducers. Refer to Chapter 9 **Spares and accessories** for a list of available adaptor cables.

RealVision™ 3D transducer extension cable

For best performance, cable runs should be kept to a minimum. However, for some installations it may be necessary to extend the transducer cable.

- 3 m (9.8 ft), 5 m (16.4 ft), and 8 m (26.2 ft) transducer extension cables are available (part numbers: 3 m - A80475, 5 m - A80476, 8 m - A80477).
- It is recommended that a maximum of two cable extensions are used, with the total cable length not exceeding 18 m.

Axiom transducer adaptor cables

The following adaptor cable are available to enable connection of a wider selection of transducers.

Axiom DV adaptor cables

A80484	Axiom DV to 7-pin Embedded Transducer Adapter
A80485	Axiom DV to 7-pin CP370 Transducer Adapter
A80486	Axiom DV to 9-pin DV & 7-Pin Embedded Transducers Y-Cable
A80487	Axiom DV to 9-pin DV & 7-Pin CP370 Transducers Y-Cable

Axiom RV adaptor cables

A80488	Axiom RV to 7-pin Embedded Transducer Adapter
A80489	Axiom RV to 7-pin CP370 Transducer Adapter

A80490	Axiom RV to 9-pin DV Transducer Adapter
A80491	Axiom RV to 25-pin RV & 7-pin Embedded Transducers Y-Cable
A80492	Axiom RV to 25-pin RV & 7-pin CP370 Transducers Y-Cable
A80493	Axiom RV to 7-pin Embedded & 9-pin DV Transducers Y-Cable
A80494	Axiom RV to 7-pin CP370 & 9-pin DV Transducers Y-Cable

Caution: Transducer cable

- Do NOT use the transducer cable to lift or suspend the transducer; always support the transducer body directly during installation.
- Do NOT cut, shorten, or splice the transducer cable.
- Do NOT remove the connector.

If the cable is cut, it cannot be repaired. Cutting the cable will also void the warranty.

4.6 Network connection

Your MFD can be directly connected to a compatible product using the RayNet network connection. Your MFD can also be connected to a network of products when using a suitable network switch.

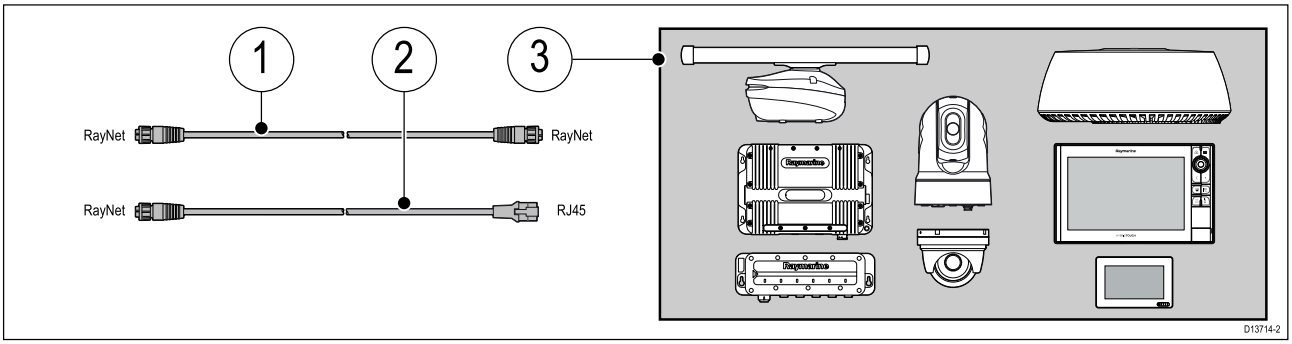

1. RayNet to RayNet cable — Connect one end of the RayNet cable to your MFD and the opposite end to a RayNet device or RayNet network switch.
2. RayNet to RJ45 cable — Connect the RayNet end of the cable to your MFD and the opposite end to a RJ45 device or RJ45 network switch or coupler.
3. Compatible network devices, such as a Network switch, Radar scanner, Sonar module, Thermal camera etc.

Note:

- Refer to the instructions supplied with your network product for specific connection information.
- Refer to Chapter 9 **Spares and accessories** for a list of available network cables.

4.7 GA150 connection

The GA150 (A80288) can be used to improve your MFD's GNSS receiver's reception.

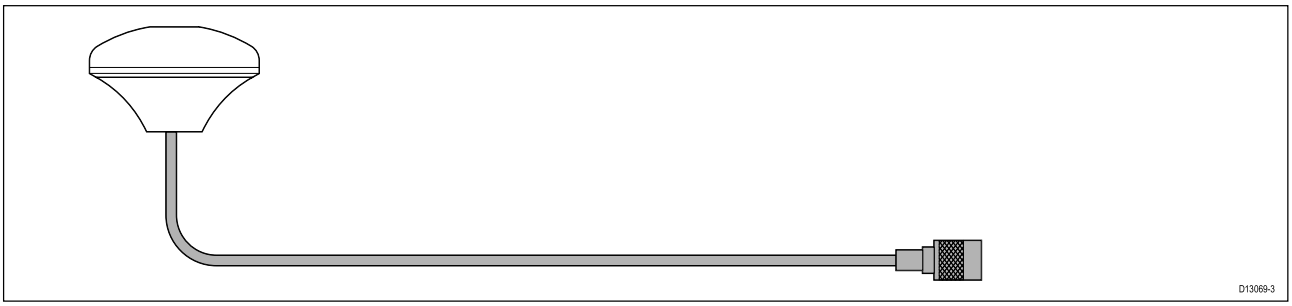

For installation details, refer to the documentation provided with your GA150.

4.8 Accessory connection

The RCR-SDUSB or RCR-2 can be connected to your MFD using the Accessory connection.

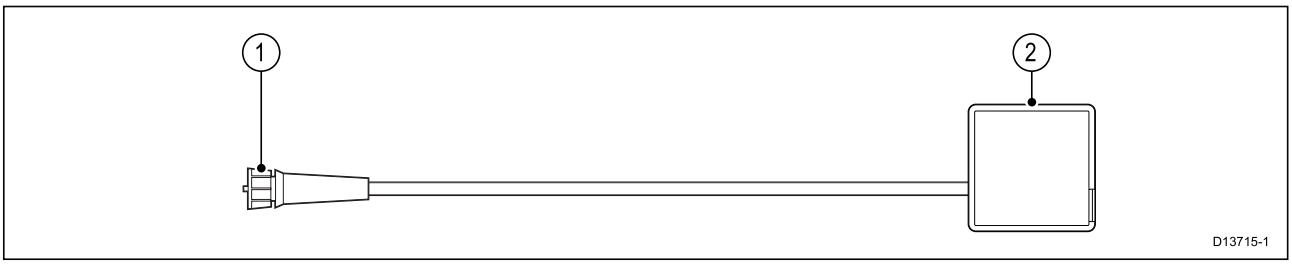

The RCR-SDUSB accessory can provide your MFD with extra storage by connecting external storage devices i.e.:

- SD card (or MicroSD card when using a SD card adaptor)
- external hard disk drive (HDD) or pen/flash drive

The HDD/flash drive slot can also supply 0.5A of current to charge mobile devices.

The RCR-2 accessory can provide your MFD with 2 x extra MicroSDHC card slots.

For installation details please refer to the instructions provided with your accessory.

Warning: USB device power

Do NOT connect any device to the product's USB connection that requires an external power source.

4.9 Analog video connection

Analog video sources such as a Thermal or security camera can be connected to your MFD using the BNC connector on the supplied Power/Video/NMEA 0183 cable.

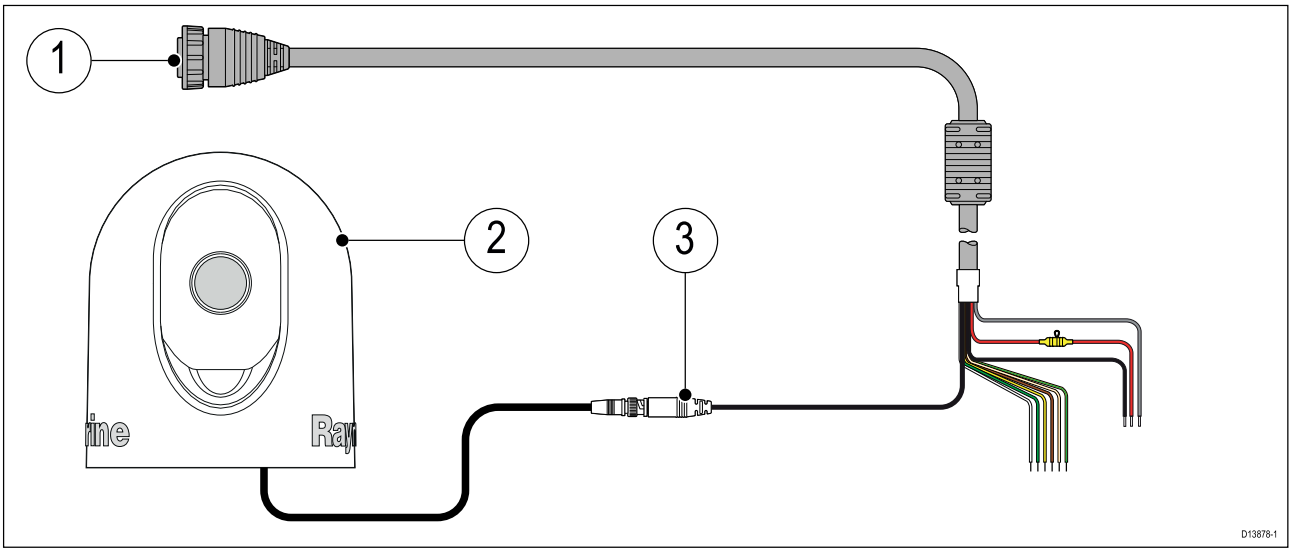

1. Power/Video/NMEA 0183 cable supplied with your MFD.
2. Analog video device.
3. Analog video BNC connector.

For installation details, refer to the documentation provided with your analog video device.

Chapter 5: Maintaining your display

Chapter contents

- 5.1 Service and maintenance on page 52
- 5.2 Product cleaning on page 53

5.1 Service and maintenance

This product contains no user serviceable components. Please refer all maintenance and repair to authorized Raymarine dealers. Unauthorized repair may affect your warranty.

Warning: High voltages

This product may contain high voltages. Do NOT remove any covers or otherwise attempt to access internal components, unless specifically instructed in the documentation provided.

Warning: FCC Warning (Part 15.21)

Changes or modifications to this equipment not expressly approved in writing by Raymarine Incorporated could violate compliance with FCC rules and void the user's authority to operate the equipment.

Caution: Sun covers

- If your product is supplied with a sun cover, to protect against the damaging effects of ultraviolet (UV) light, always fit the sun cover when the product is not in use.
- Sun covers must be removed when travelling at high speed, whether in water or when the vessel is being towed.

Routine equipment checks

It is recommended that you perform the following routine checks, on a regular basis, to ensure the correct and reliable operation of your equipment:

- Examine all cables for signs of damage or wear and tear.
- Check that all cables are securely connected.

5.2 Product cleaning

Best cleaning practices.

When cleaning products:

- Lightly rinse or flush with clean, cool fresh water.
- If your product has a display screen, do NOT wipe the screen with a dry cloth, as this could scratch the screen coating.
- Do NOT use: abrasive, acidic, ammonia, solvent of chemical based cleaning products.
- Do NOT use a jet wash.

Cleaning the display case

The display unit is a sealed unit and does not require regular cleaning. If it is necessary to clean the unit, follow this basic procedure:

1. Switch off the power to the display.
2. Wipe the display with a clean, soft cloth (a microfibre cloth is ideal).
3. If necessary, use a mild detergent to remove grease marks.

Note: Do NOT use solvents or detergents on the screen itself.

Cleaning the display screen

A coating is applied to the display screen. This makes it water repellent, and prevents glare. To avoid damaging this coating, follow this procedure:

1. Switch off the power to the display.
2. Rinse the screen with fresh water to remove all dirt particles and salt deposits.
3. Allow the screen to dry naturally.
4. If any smears remain, very gently wipe the screen with a clean microfibre cleaning cloth (available from an opticians).

Cleaning the sun cover

The supplied sun cover features an adhesive surface. In certain conditions unwanted contaminants may stick to this surface. To avoid damaging the monitor display, clean the sun cover regularly following this procedure:

1. Carefully remove the sun cover from the display.
2. Rinse the sun cover with fresh water to remove all dirt particles and salt deposits.
3. Allow the sun cover to dry naturally.

Chapter 6: Troubleshooting

Chapter contents

- 6.1 Troubleshooting on page 56
- 6.2 Power up troubleshooting on page 57
- 6.3 GNSS troubleshooting on page 58
- 6.4 Sonar troubleshooting on page 59
- 6.5 Wi-Fi troubleshooting on page 62
- 6.6 Touchscreen troubleshooting on page 65
- 6.7 Miscellaneous troubleshooting on page 66

6.1 Troubleshooting

The troubleshooting information provides possible causes and corrective action required for common problems associated with installation and operation of your product.

Before packing and shipping, all Raymarine products are subjected to comprehensive testing and quality assurance programs. If you do experience problems with your product this section will help you to diagnose and correct problems in order to restore normal operation.

If after referring to this section you are still having problems with your product, please refer to the Technical support section of this manual for useful links and Raymarine Product Support contact details.

6.2 Power up troubleshooting

Product does not turn on or keeps turning off

Possible causes	Possible solutions
Blown fuse / tripped breaker	1. Check condition of relevant fuses and breakers and connections, replace if necessary. (Refer to the *Technical Specification* section of your product's installation instructions for fuse ratings.) 2. If fuse keeps blowing check for cable damage, broken connector pins or incorrect wiring.
Poor / damaged / insecure power supply cable / connections	1. Check that the power cable connector is fully inserted into the unit and locked in position. 2. Check the power supply cable and connectors for signs of damage or corrosion, and replace if necessary. 3. With the unit turned on, try flexing the power cable near to the display connector to see if this causes the unit to restart or lose power; replace if necessary. 4. Check the vessel's battery voltage and the condition of the battery terminals and power supply cables, ensuring connections are secure, clean and free from corrosion. Replace if necessary. 5. With the product under load, using a multi-meter, check for high voltage drop across all connectors / fuses etc, and replace if necessary.
Incorrect power connection	The power supply may be wired incorrectly, ensure the installation instructions have been followed.
Power source insufficient	With the product under load, using a multi-meter, check the power supply voltage as close to the unit as possible to establish actual voltage when the current is flowing. (Refer to the *Technical Specification* section of your product's installation instructions for power supply requirements.)

Product will not start up (restart loop)

Possible causes	Possible solutions
Power supply and connection	See possible solutions from the table above, entitled 'Product does not turn on or keeps turning off'.
Software corruption	1. In the unlikely event that the product's software has become corrupted, try downloading and installing the latest software from the Raymarine website. 2. On display products, as a last resort, attempt to perform a 'Power on Reset'. Be aware that this will delete all settings / presets and user data (such as waypoints and tracks), and revert the unit back to factory defaults.

Performing a Power on Reset

1. Within 60 seconds of powering on your MFD, swipe your finger from right to left (opposite direction to powering on) across the **Power** button swipe area 5 times.

   Recovery options are displayed.
2. Swipe your finger from right to left twice to highlight **Wipe data/factory reset**.
3. Swipe your finger from left to right once to accept.
4. Swipe your finger from right to left once to highlight **Yes**.
5. Swipe your finger from left to right once to perform the factory reset.
6. When **Data wipe complete** is displayed, swipe your finger from left to right to reboot your MFD.

6.3 GNSS troubleshooting

Problems with the GNSS and their possible causes and solutions are described here.

Problem	Possible causes	Possible solutions
“No Fix” GNSS status icon is displayed.	Geographic location or prevailing conditions preventing satellite fix.	Check periodically to see if a fix is obtained in better conditions or another geographic location.
	GNSS connection fault.	Ensure that external GNSS connections and cabling are correct and fault free.
	External GNSS receiver in poor location. For example: • Below decks. • Close proximity to transmitting equipment such as VHF radio.	Ensure GNSS receiver has a clear view of the sky.
	GNSS installation problem.	Refer to the installation instructions.

Note: A GNSS Status screen is accessible from the display. This provides satellite signal strength and other relevant information.

6.4 Sonar troubleshooting

Problems with the sonar and their possible causes and solutions are described here.

Scrolling image is not being displayed

Possible causes	Possible solutions
Sonar disabled	Select **Ping Enable** from the Sonar app's Sounder menu.
Incorrect transducer selected	Check that the correct transducer is selected in the Sonar app's Transducer menu.
Damaged cables	1. Check that the transducer cable connector is fully inserted and locked in position. 2. Check the power supply cable and connectors for signs of damage or corrosion, replace if necessary. 3. With the unit turned on, try flexing the cable near to the display connector to see if this causes the unit to re-boot/loose power, replace if necessary. 4. Check the vessel's battery voltage, the condition of the battery terminals and power supply cables, ensuring connections are secure, clean and free from corrosion, replace if necessary. 5. With the product under load, using a multi-meter, check for high voltage drop across all connectors/fuses etc (this can cause the Sonar applications to stop scrolling or the unit to reset/turn off), replace if necessary.
Damaged or fouled transducer	Check the condition of the transducer ensuring it is not damaged and is free from debris/fouling, clean or replace as necessary.
Wrong transducer fitted	Ensure the transducer is compatible with your system.
External sonar module: SeaTalkhs ™ / RayNet network problem.	• Check that the unit is correctly connected to the multifunction display or Raymarine network switch. If a crossover coupler or other coupler cable / adapter is used, check all connections ensuring connections are secure, clean and free from corrosion, replace if necessary.
External sonar module: Software mismatch between equipment may prevent communication.	Ensure all Raymarine products contain the latest available software, check the Raymarine website: www.raymarine.com/software for software compatibility.

No depth reading / lost bottom lock

Possible causes	Possible solutions
Transducer location	Check that the transducer has been installed in accordance with the instructions provided with the transducer.
Transducer angle	If the transducer angle is too great the beam can miss the bottom, adjust transducer angle and recheck.
Transducer kicked-up	If the transducer has a kick-up mechanism, check that it has not kicked up due to hitting an object.
Power source insufficient	With the product under load, using a multi-meter, check the power supply voltage as close to the unit as possible to establish actual voltage when the current is flowing. (Check your product's Technical specification for power supply requirements.)
Damaged or fouled transducer	Check the condition of the transducer ensuring it is not damaged and is free from debris / fouling.

Possible causes	Possible solutions
Damaged cables	1. Check the unit's connector for broken or bent pins. 2. Check that the cable connector is fully inserted into the unit and that the locking collar is in the locked position. 3. Check the cable and connectors for signs of damage or corrosion, replace if necessary. 4. With the unit turned on, try flexing the power cable near to the display connector to see if this causes the unit to re-boot/loose power, replace if necessary. 5. Check the vessel's battery voltage, the condition of the battery terminals and power supply cables, ensuring connections are secure, clean and free from corrosion, replace if necessary. 6. With the product under load, using a multi-meter, check for high voltage drop across all connectors/fuses etc (this can cause the Sonar applications to stop scrolling or the unit to reset/turn off), replace if necessary.
Vessel speed too high	Slow vessel speed and recheck.
Bottom too shallow or too deep	The bottom depth may be outside of the transducers depth range, move vessel to shallower or deeper waters as relevant and recheck.

Poor / problematic image

Possible causes	Possible solutions
Vessel stationary	Fish arches are not displayed if the vessel is stationary; fish will appear on the display as straight lines.
Scrolling paused or speed set too low	Unpause or increase sonar scrolling speed.
Sensitivity settings may be inappropriate for present conditions.	Check and adjust sensitivity settings or perform a Sonar reset.
Damaged cables	1. Check the unit's connector for broken or bent pins. 2. Check that the cable connector is fully inserted into the unit and that the locking collar is in the locked position. 3. Check the cable and connectors for signs of damage or corrosion, replace if necessary. 4. With the unit turned on, try flexing the power cable near to the display connector to see if this causes the unit to re-boot/loose power, replace if necessary. 5. Check the vessel's battery voltage, the condition of the battery terminals and power supply cables, ensuring connections are secure, clean and free from corrosion, replace if necessary. 6. With the product under load, using a multi-meter, check for high voltage drop across all connectors/fuses etc (this can cause the Sonar applications to stop scrolling or the unit to reset/turn off), replace if necessary.

Possible causes	Possible solutions
Transducer location	• Check that the transducer has been installed in accordance with the instructions provided with the transducer. • If a transom mount transducer is mounted too high on the transom it may be lifting out of the water, check that the transducer face is fully submerged when planing and turning.
Transducer kicked-up	If the transducer has a kick-up mechanism, check that it has not kicked up due to hitting an object.
Damaged or fouled transducer	Check the condition of the transducer ensuring it is not damaged and is free from debris / fouling.
Damaged transducer cable	Check that the transducer cable and connection is free from damage and that the connections are secure and free from corrosion.
Turbulence around the transducer at higher speeds may affect transducer performance	Slow vessel speed and recheck.
Interference from another transducer	1. Turn off the transducer causing the interference. 2. Reposition the transducers so they are further apart.
Unit power supply fault	Check the voltage from the power supply, if this is too low it can affect the transmitting power of the unit.

6.5 Wi-Fi troubleshooting

Before troubleshooting problems with your Wi-Fi connection, ensure that you have followed the Wi-Fi location requirements guidance provided in the relevant installation instructions and performed a power cycle/reboot of the devices you are experiencing problems with.

Cannot find network

Possible cause	Possible solutions
Wi-Fi not currently enabled on devices.	Ensure Wi-Fi is enabled on both Wi-Fi devices and rescan available networks.
Some devices may automatically turn off Wi-Fi when not in use to save power.	Power cycle / reboot devices and rescan available networks.
Device not broadcasting.	1. Try to enable broadcasting of the device's network using the Wi-Fi settings on the device you are trying to connect to. 2. You may still be able to connect to the device, when it is not broadcasting, by manually entering the device's Wi-Fi Name / SSID and passphrase in the connection settings of the device you are trying to connect.
Devices out of range or signal being blocked.	Move devices closer together or, if possible remove the obstructions and then rescan available network.

Cannot connect to network

Possible cause	Possible solutions
Some devices may automatically turn off Wi-Fi when not in use to save power.	Power cycle/reboot devices and retry the connection.
Trying to connect to the wrong Wi-Fi network	Ensure you are trying to connect to the correct Wi-Fi network, the Wi-Fi network's name can be found in the Wi-Fi settings on the broadcasting device (the device that you are trying to connect to).
Incorrect network credentials	Ensure you are using the correct passphrase, the Wi-Fi network's passphrase can be found in the Wi-Fi settings on the broadcasting device (the device that you are trying to connect to).
Bulkheads, decks and other heavy structure can degrade and even block the Wi-Fi signal. Depending on the thickness and material used it may not always be possible to pass a Wi-Fi signal through certain structures	1. Try repositioning the devices so the structure is removed from the direct line of sight between the devices, or 2. If possible use a wired connection instead.
Interference being caused by other Wi-Fi enabled or older Bluetooth enabled devices (Bluetooth and Wi-Fi both operate in the 2.4 GHz frequency range, some older bluetooth devices may interfere with Wi-Fi signals.)	1. Change the Wi-Fi Channel of the device you are trying to connect to and retry the connection. You can use free Wi-Fi analyzer apps on your smart device to help you choose a better channel (channel with least traffic). 2. Temporarily disable each wireless device in turn until you have identified the device causing the interference.

Possible cause	Possible solutions
Interference caused by other devices that use the 2.4GHz frequency See list below of some common devices that use the 2.4GHz frequency: • Microwave ovens • Fluorescent lighting • Cordless phones / baby monitors • Motion sensors	Temporarily switch off each device in turn until you have identified the device causing the interference, then remove or reposition the offending device(s).
Interference caused by electrical and electronic devices and associated cabling could generate an electromagnetic field which may interfere with the Wi-Fi signal.	Temporarily switch off each item in turn until you have identified the device causing the interference, then remove or reposition the offending device(s).

Connection extremely slow and or keeps dropping out

Possible cause	Possible solutions
Wi-Fi performance degrades over distance so products farther away will receive less network bandwidth. Products installed close to their maximum Wi-Fi range will experience slow connection speeds, signal drop outs or not being able to connect at all.	• Move devices closer together. • For fixed installations such as a Quantum Radar, enable the Wi-Fi connection on an MFD installed closer to the device.
Interference being caused by other Wi-Fi enabled or older Bluetooth enabled devices (Bluetooth and Wi-Fi both operate in the 2.4 GHz frequency range, some older bluetooth devices may interfere with Wi-Fi signals.)	1. Change the Wi-Fi Channel of the device you are trying to connect to and retry the connection. You can use free Wi-Fi analyzer apps on your smart device to help you choose a better channel (channel with least traffic). 2. Temporarily switch off each device in turn until you have identified the device causing the interference, then remove or reposition the offending device(s).
Interference from devices on other vessels. When in close proximity to other vessels, for example, when moored up in a marina, many other Wi-Fi signals may be present.	1. Change the Wi-Fi Channel of the device you are trying to connect to and retry the connection. You can use free Wi-Fi analyzer apps on your smart device to help you choose a better channel (channel with least traffic). 2. If possible, move your vessel to a location with less Wi-Fi traffic.

Network connection established but no data

Possible cause	Possible solutions
Connected to the wrong network.	Ensure that your devices is connected to the correct network.
Device software incompatibility	Ensure both devices are running the latest available software.
It may be possible that the device has become defective	1. Try updating software to a later version, or 2. try reinstalling the software. 3. Obtain new replacement device.

Mobile application running slowly or not at all

Possible cause	Possible solutions
Raymarine app not installed	Install mobile app from relevant app store.
Raymarine app version not compatible with MFD software	Ensure mobile app and MFD software are latest available versions.
Mobile apps not enabled on MFD	Enable “Viewing only” or “Remote Control” as required in the Mobile Apps setting on your MFD.

6.6 Touchscreen troubleshooting

Problems with the touchscreen and their possible causes and solutions are described here.

Problem	Possible causes	Possible solutions
Touchscreen does not operate as expected.	TouchLock is enabled.	Swipe your finger from left to right across the **Power** button swipe area to de-activate the TouchLock.
	Screen is not being operated with bare fingers, for example gloves are being worn.	Bare fingers must make contact with the screen for correct operation. Alternatively you may use conductive gloves.
	Water deposits on the screen.	Carefully clean and dry the screen in accordance with the instructions provided.

6.7 Miscellaneous troubleshooting

Miscellaneous problems and their possible causes and solutions are described here.

Problem	Possible causes	Possible solutions
Display behaves erratically: • Frequent unexpected resets. • System crashes or other erratic behavior.	Intermittent problem with power to the display.	Check relevant fuses and breakers.
		Check that the power supply cable is sound and that all connections are tight and free from corrosion.
		Check that the power source is of the correct voltage and sufficient current.
	Software mismatch on system (upgrade required).	Go to www.raymarine.com and click on support for the latest software downloads.
	Corrupt data / other unknown issue.	Perform a factory reset. **Important:** This will result in the loss of any settings and data (such as waypoints) stored on the product. Save any important data to a memory card before resetting.

Chapter 7: Technical support

Chapter contents

- 7.1 Raymarine product support and servicing on page 68
- 7.2 Learning resources on page 70

7.1 Raymarine product support and servicing

Raymarine provides a comprehensive product support service, as well as warranty, service, and repairs. You can access these services through the Raymarine website, telephone, and e-mail.

Product information

If you need to request service or support, please have the following information to hand:

- Product name.
- Product identity.
- Serial number.
- Software application version.
- System diagrams.

You can obtain this product information using the menus within your product.

Servicing and warranty

Raymarine offers dedicated service departments for warranty, service, and repairs.

Don't forget to visit the Raymarine website to register your product for extended warranty benefits: http://www.raymarine.co.uk/display/?id=788.

Region	Telephone	E-mail
United Kingdom (UK), EMEA, and Asia Pacific	+44 (0)1329 246 932	emea.service@raymarine.com
United States (US)	+1 (603) 324 7900	rm-usrepair@flir.com

Web support

Please visit the "Support" area of the Raymarine website for:

- **Manuals and Documents** — http://www.raymarine.com/manuals
- **FAQ / Knowledgebase** — http://www.raymarine.com/knowledgebase
- **Technical support forum** — http://forum.raymarine.com
- **Software updates** — http://www.raymarine.com/software

Telephone and e-mail support

Region	Telephone	E-mail
United Kingdom (UK), EMEA, and Asia Pacific	+44 (0)1329 246 777	support.uk@raymarine.com
United States (US)	+1 (603) 324 7900 (Toll-free: +800 539 5539)	support@raymarine.com
Australia and New Zealand	+61 2 8977 0300	aus.support@raymarine.com (Raymarine subsidiary)
France	+33 (0)1 46 49 72 30	support.fr@raymarine.com (Raymarine subsidiary)
Germany	+49 (0)40 237 808 0	support.de@raymarine.com (Raymarine subsidiary)
Italy	+39 02 9945 1001	support.it@raymarine.com (Raymarine subsidiary)
Spain	+34 96 2965 102	sat@azimut.es (Authorized Raymarine distributor)
Netherlands	+31 (0)26 3614 905	support.nl@raymarine.com (Raymarine subsidiary)
Sweden	+46 (0)317 633 670	support.se@raymarine.com (Raymarine subsidiary)
Finland	+358 (0)207 619 937	support.fi@raymarine.com (Raymarine subsidiary)

Region	Telephone	E-mail
Norway	+47 692 64 600	support.no@raymarine.com (Raymarine subsidiary)
Denmark	+45 437 164 64	support.dk@raymarine.com (Raymarine subsidiary)
Russia	+7 495 788 0508	info@mikstmarine.ru (Authorized Raymarine distributor)

Viewing product information

The **Getting started** tab contains hardware and software information for your MFD.

1. Select **Settings**, from the Homescreen.

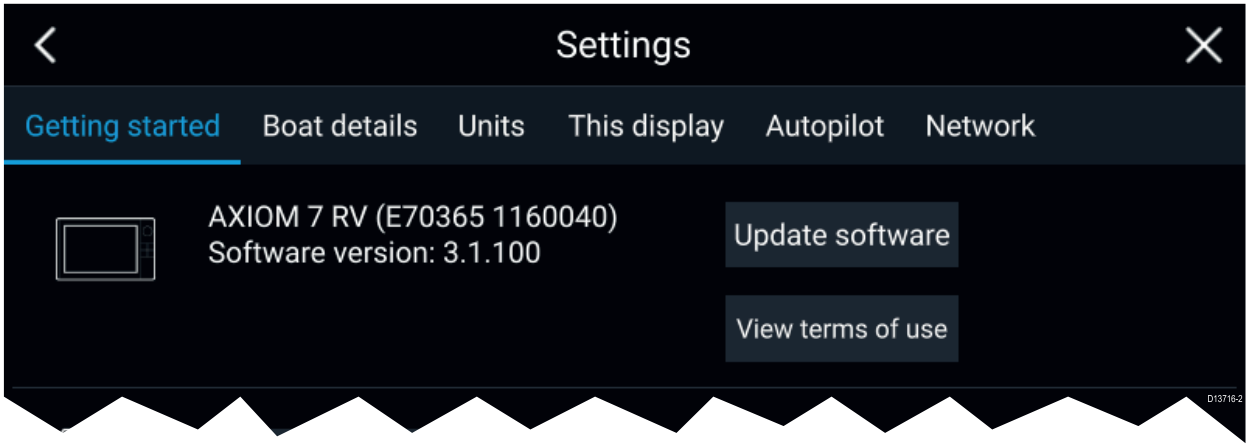

7.2 Learning resources

Raymarine has produced a range of learning resources to help you get the most out of your products.

Video tutorials

	Raymarine official channel on YouTube: • http://www.youtube.com/user/RaymarineInc
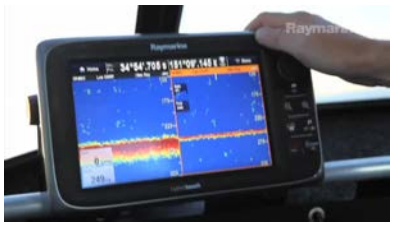	Video Gallery: • http://www.raymarine.co.uk/view/?id=2679
	Product Support videos: • http://www.raymarine.co.uk/view/?id=4952

Note:

- Viewing the videos requires a device with an Internet connection.
- Some videos are only available in English.

Training courses

Raymarine regularly runs a range of in-depth training courses to help you make the most of your products. Visit the Training section of the Raymarine website for more information:

- http://www.raymarine.co.uk/view/?id=2372

FAQs and Knowledge Base

Raymarine has produced an extensive set of FAQs and a Knowledge Base to help you find more information and troubleshoot any issues.

- http://www.raymarine.co.uk/knowledgebase/

Technical support forum

You can use the Technical support forum to ask a technical question about a Raymarine product or to find out how other customers are using their Raymarine equipment. The resource is regularly updated with contributions from Raymarine customers and staff:

- http://forum.raymarine.com

Chapter 8: Technical specification

Chapter contents

- 8.1 Axiom Pro technical specification on page 72
- 8.2 Internal sonar specification on page 74
- 8.3 Internal GNSS (GPS / GLONASS) receiver specification on page 75

8.1 Axiom Pro technical specification

Power

	Axiom™ Pro 9	**Axiom™ Pro 12**	**Axiom™ Pro 16**
Nominal supply voltage	12/24 V dc		
Operating voltage range	8 V dc to 32V dc		
Fuse requirements	• Inline fuse = 15 Amp, or • Thermal breaker = 15 Amp		
Maximum current	6A		
LEN	1		

Environmental

	Axiom™ Pro 9	**Axiom™ Pro 12**	**Axiom™ Pro 16**
Operating temperature range	-25°C to + 55°C		
Storage temperature range	-30°C to + 70°C		
Humidity	up to 93% @ 40°C		
Water ingress protection	IPx6 and IPx7		

LCD specification

	Axiom™ Pro 9	**Axiom™ Pro 12**	**Axiom™ Pro 16**
Size (diagonal)	9.0”	12.1”	15.6”
Type	IPS (In-Plane Switching)		
Color depth	24 bit		
Resolution	1280 x 720 HD	1280 x 800 WXGA	1920 x 1080 FHD
Ratio	16:9	16:10	16:9
Illumination	1200 nits / 1200 cd/m^2		
Viewing angle	Top 88° / Bottom 88° / Left 88° / Right 88°		
Number of simultaneous touches	1 to 16		

Data connections

	Axiom™ Pro 9	**Axiom™ Pro 12**	**Axiom™ Pro 16**
Transducer	• RVX variant – 25 pin RealVision™ connector – 11 pin 1kW connector • S variant – 25 pin connector (requires adaptor cable)		
NMEA 2000	1 x DeviceNet male connector		
NMEA 0183	2 x NMEA 0183 ports via Power/Video/NMEA 0183 cable: • NMEA port 1: Input and output, 4,800 / 38,400 baud rate • NMEA port 2: Input only, 4,800 / 38,400 baud rate		
GA150	1 x TNC type external GNSS antenna connection		
Analog video input	1 x Composite female BNC connector via Power/Video/NMEA 0183 cable.		

	Axiom™ Pro 9	Axiom™ Pro 12	Axiom™ Pro 16
Accessory	1 x USB Micro B connection		
Network	2 x RayNet type SeaTalkhs ™ connector 10/100 Mbits/s		
Wi-Fi	802.11/b/g/n		
Bluetooth	Bluetooth V4.0		

Storage

	Axiom™ Pro 9	Axiom™ Pro 12	Axiom™ Pro 16
Internal	16 GB Solid State (14 GB usable)		
MicroSD card reader	2 x MicroSDXC card slot		
External (via RCR-SDUSB accessory)	• 1 x SD card slot • 1 x USB A		
External (via RCR-2 accessory)	2 x MicroSDHC card slots		

8.2 Internal sonar specification

RealVision™ 3D sonar specification

The following specification only applies to RealVision™ 3D products.

Channels	Channels • 1 x CHIRP sonar • 1 x DownVision™ • 1 x SideVision™ • 1 x RealVision™ 3D
Range	• CHIRP sonar = 0.6 M (2 ft) to 274 m (900 ft) • DownVision™ = 0.6 M (2 ft) to 183 m (600 ft) • SideVision™ = 0.6 M (2 ft) to 91 m (300 ft) • RealVision™ 3D = 0.6 M (2 ft) to 91 m (300 ft)

1kW sonar specification

The following specification only applies to Axiom™ Pro RVX products.

Channels	Channels • 1 x 50 kHz Low CHIRP • 1 x 200 kHz High CHIRP
Range	0.9 m (3 ft) to 914.4 m (3,000 ft) (In optimum conditions using a 1kW transducer.)

8.3 Internal GNSS (GPS / GLONASS) receiver specification

Channels	Multiple — ability to simultaneously track up to 28 satellites
Cold start	<2 minutes
Receiver IC Sensitivity	• 165 dBm (Tracking) • 160 dBm (Acquisition) • 148 dBm (Cold start)
GNSS compatibility	• GPS • GLONASS • Beidou* • Galileo*
SBAS compatibility	• EGNOS • GAGAN • MSAS • QZSS • WAAS
Operating frequency	1574 MHz to 1605 MHz
Signal Acquisition	Automatic
Almanac Update	Automatic
Geodetic Datum	WGS-84 (alternatives can be selected on the MFD)
Refresh Rate	10 Hz (10 times per second)
Antenna	• **Internal** — Ceramic chip mounted near top of unit
Position Accuracy	• Without SBAS: <= 15 metres 95% of the time • With SBAS: <= 5 metres 95% of the time

Note: * Supported in future software update.

Chapter 9: Spares and accessories

Chapter contents

- 9.1 AXIOM Pro accessories on page 78
- 9.2 AXIOM Pro spares on page 79
- 9.3 **RayNet** to **RayNet** cables and connectors on page 80
- 9.4 SeaTalk ng® cables and accessories on page 83

9.1 AXIOM Pro accessories

	Part numbers		
Item	**Axiom™ Pro 9**	**Axiom™ Pro 12**	**Axiom™ Pro 16**
RCR-SDUSB — External MicroSD and USB reader	A80440		
RMK-10 — MFD remote control	A80438 / T70293		
GA150	A80288		
Suncover	A80534	A80535	A80536
Axiom Pro Bracket/Ball mount plate	N/A	N/A	A80537
Right angled RV transducer adaptor cable	A80515		

Axiom transducer adaptor cables

The following adaptor cable are available to enable connection of a wider selection of transducers.

Axiom DV adaptor cables

A80484	Axiom DV to 7-pin Embedded Transducer Adapter
A80485	Axiom DV to 7-pin CP370 Transducer Adapter
A80486	Axiom DV to 9-pin DV & 7-Pin Embedded Transducers Y-Cable
A80487	Axiom DV to 9-pin DV & 7-Pin CP370 Transducers Y-Cable

Axiom RV adaptor cables

A80488	Axiom RV to 7-pin Embedded Transducer Adapter
A80489	Axiom RV to 7-pin CP370 Transducer Adapter
A80490	Axiom RV to 9-pin DV Transducer Adapter
A80491	Axiom RV to 25-pin RV & 7-pin Embedded Transducers Y-Cable
A80492	Axiom RV to 25-pin RV & 7-pin CP370 Transducers Y-Cable
A80493	Axiom RV to 7-pin Embedded & 9-pin DV Transducers Y-Cable
A80494	Axiom RV to 7-pin CP370 & 9-pin DV Transducers Y-Cable

Legacy MFD adaptor plates

Adaptor plates are available to enable installation of Axiom Pro MFDs in the place of a Legacy MFDs.

Existing legacy MFD	Adaptor part number	New MFD
C90W / E90W	A80530	Axiom Pro 9”
C120W / E120W	A80531	Axiom Pro 12”
e165 / E140W	A80533	Axiom Pro 16”

9.2 AXIOM Pro spares

	Part numbers		
Item	**Axiom™ Pro 9**	**Axiom™ Pro 12**	**Axiom™ Pro 16**
Power/Video/NMEA 0183 cable 1.5 m (4.9 ft)	R62379		
Angled Power/Video/NMEA 0183 cable 1.5 m (4.9 ft) with right angled connector	R70029		
Keypad assembly	R70600		
Trim kit — Replacement bezel pieces	R70383	R70387	R70598
Mounting seal kit	R70385	R70388	R70599
Trunnion kit	R70384	R70389	N/A

9.3 RayNet to RayNet cables and connectors

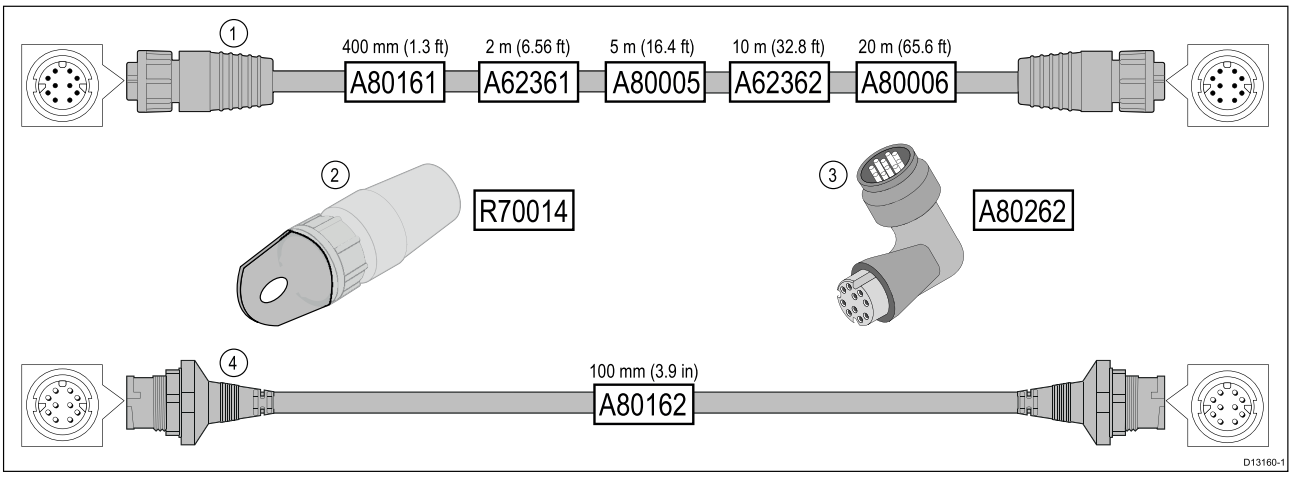

	Description	Typical use	Quantity
1	Standard **RayNet** connection cable with a **RayNet** (female) socket on both ends.	Suitable for connecting all **RayNet** equipment directly to **LightHouse** multifunction displays featuring a **RayNet** connector. Can also be used to connect **RayNet** equipment via a **RayNet** network switch (e.g. **HS5**).	1
2	**RayNet** cable puller (5 pack).	These “handles” securely attach to the twist-lock on **RayNet** cables, enabling you to pull the cables through conduits and other obstacles.	5
3	**RayNet** to **RayNet** right-angle coupler / adapter.	Suitable for connecting **RayNet** cables at 90° (right angle) to devices, for installations where space is limited. For example, use this adapter to connect a **RayNet** cable to a multifunction display when there is not enough space behind the display for the usual cable bend radius required by a standard RayNet cable. This adapter features a **RayNet** (female) socket at one end, and a **RayNet** (male) plug at the other end.	1
4	Adapter cable with a **RayNet** (male) plug on both ends.	Suitable for joining (female) **RayNet** cables together for longer cable runs.	1

RayNet to RJ45 adapter cables

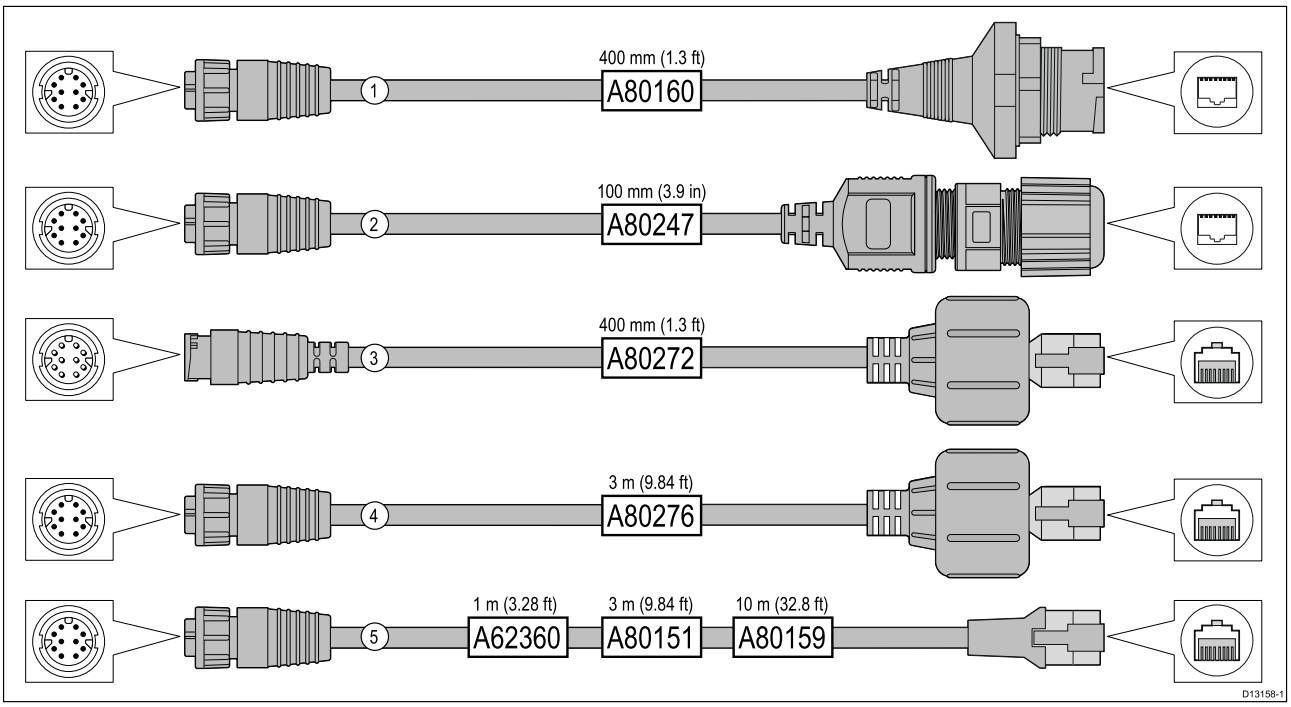

	Description	Typical use	Quantity
1	Adapter cable with a **RayNet** (female) socket on one end, and a waterproof (female) socket on the other end accepting the following cables with an **RJ45 SeaTalk hs** waterproof **locking** (male) plug: • **A62245** (1.5 m). • **A62246** (15 m).	A typical use for this adapter cable is to connect a **DSM300** sonar module to a **LightHouse** MFD, using all-waterproof cable connections. This adapter cable will also accept the following **RJ45 SeaTalk hs** cables, although the **RJ45** plug that connects at the equipment end (e.g. **DSM300**) will NOT be waterproof: • **E55049** (1.5 m). • **E55050** (5 m). • **E55051** (10 m). • **A62135** (15 m). • **E55052** (20 m).	1
2	Adapter cable with a **RayNet** (female) socket on one end, and a waterproof (female) **RJ45** socket on the other end, along with a locking gland for a watertight fit.	Directly connect a Raymarine radar scanner with an **RJ45 SeaTalk hs** (male) cable to a **RayNet** network switch (e.g. **HS5**) or **LightHouse** MFD.	1
3	Adapter cable with a **RayNet** (male) plug on one end, and an **RJ45 SeaTalk hs** waterproof (male) plug on the other end.	Connect a legacy **G-Series GPM-400**, **C-Series** Widescreen or **E-Series** Widescreen MFD to a Raymarine radar scanner supplied with a **RayNet** power / data cable.	1

	Description	Typical use	Quantity
4	Adapter cable with a **RayNet** (female) socket on one end, and an **RJ45 SeaTalk hs** waterproof (male) plug on the other end.	Connect a legacy **G-Series GPM-400**, **C-Series** Widescreen or **E-Series** Widescreen MFD to a **RayNet** network switch (e.g. the **HS5**).	1
5	Adapter cable with a **RayNet** (female) socket on one end, and an **RJ45 SeaTalk hs** (female) socket on the other end.	Connect a **LightHouse** MFD to a legacy **SR6** switch / weather receiver or a legacy 8–port **SeaTalk hs** network switch. Another common use for the cable is in conjunction with a crossover coupler (**E55060** or **R32142**) to connect Raymarine products with an **RJ45** connection (e.g. radar scanner, thermal camera or **DSM300**) to a **LightHouse** MFD or **RayNet** network switch (e.g. the **HS5**).	1

9.4 SeaTalk ng® cables and accessories

SeaTalk ng cables and accessories for use with compatible products.

Part No	Description	Notes
T70134	SeaTalk ng starter kit	Includes: • 1 x 5 Way connector (A06064) • 2 x Backbone terminator (A06031) • 1 x 3 m (9.8 ft) spur cable (A06040) • 1 x Power cable (A06049)
A25062	SeaTalk ng Backbone Kit	Includes: • 2 x 5 m (16.4 ft) Backbone cable (A06036) • 1 x 20 m (65.6 ft) Backbone cable (A06037) • 4 x T-piece (A06028) • 2 x Backbone terminator (A06031) • 1 x Power cable (A06049)
A06038	SeaTalk ng 0.4 m (1.3 ft) spur	
A06039	SeaTalk ng 1 m (3.3 ft) spur	
A06040	SeaTalk ng 3 m (9.8 ft) spur	
A06041	SeaTalk ng 5 m (16.4 ft) spur	
A06042	SeaTalk ng 0.4 m (1.3 ft) elbow spur	
A06033	SeaTalk ng 0.4 m (1.3 ft) backbone	
A06034	SeaTalk ng 1 m (3.3 ft) backbone	
A06035	SeaTalk ng 3 m (9.8 ft) backbone	
A06036	SeaTalk ng 5 m (16.4 ft) backbone	
A06068	SeaTalk ng 9 m (29.5 ft) backbone	
A06037	SeaTalk ng 20 m (65.6 ft) backbone	
A06043	SeaTalk ng to bare ends 1 m (3.3 ft) spur	
A06044	SeaTalk ng to bare ends 3 m (9.8 ft) spur	
A06049	SeaTalk ng Power cable	
A06031	SeaTalk ng Terminator	
A06028	SeaTalk ng T-piece	Provides 1 x spur connection
A06064	SeaTalk ng 5–way connector	Provides 3 x spur connections
A06030	SeaTalk ng backbone extender	
E22158	SeaTalk to SeaTalk ng converter kit	Allows the connection of SeaTalk devices to a SeaTalk ng system.
A80001	SeaTalk ng Inline terminator	Provides direct connection of a spur cable to the end of a backbone cable. No T-piece required.

Part No	Description	Notes
A06032	SeaTalk ng Blanking plug	
R12112	ACU / SPX SeaTalk ng spur cable 0.3 m (1.0 ft)	Connects an SPX course computer or an ACU to a SeaTalk ng backbone.
A06047	SeaTalk (3 pin) to SeaTalk ng adaptor cable 0.4 m (1.3 ft)	
A22164	SeaTalk to SeaTalk ng spur 1 m (3.3 ft) spur	
A06048	SeaTalk2 (5 pin) to SeaTalk ng adaptor cable 0.4 m (1.3 ft)	
A06045	DeviceNet adaptor cable (Female)	Allows the connection of NMEA 2000 devices to a SeaTalk ng system.
A06046	DeviceNet adaptor cable (Male)	Allows the connection of NMEA 2000 devices to a SeaTalk ng system.
E05026	DeviceNet adaptor cable (Female) to bare ends.	Allows the connection of NMEA 2000 devices to a SeaTalk ng system.
E05027	DeviceNet adaptor cable (Male) to bare ends.	Allows the connection of NMEA 2000 devices to a SeaTalk ng system.

Index

A

Axiom™ Pro MFDs 15

C

CHIRP transducers 17
Cleaning 53
Compass safe distance 23
Conical beam transducers 17
Connecting cables 36
Connection
  Accessory 48
  Analog camera 49
  Analog video 49
  Battery 38
  Distribution panel 39
  Ethernet 46
  External storage 48
  GA150 47
  Network 46
  NMEA 0183 43
  NMEA 2000 42
  Power 37
  RayNet 46
  SeaTalkhs 46
  SeaTalkng 42
  Transducer 44
Connections 34
Connectors 34
Contact details 68

D

Dedicated grounding 41
Dimensions
  Axiom Pro 12 26
  Axiom Pro 16 27
  Axiom Pro 9 26
DownVision™ transducers 16–17

E

Electromagnetic Compatibility 22
EMC, *See* Electromagnetic Compatibility

F

Fuse rating 37

I

Installation
  Best practice 40
  Mounting options 28
  Surface mounting 29
  Trunnion mounting 31
Interference 23
  See also Compass safe distance

L

Legacy adaptor 14
LightHouse 3 14
Location requirements
  General 22
  GPS 23
  Touchscreen 25
  Viewing angle 26
  Wi-Fi 25

M

Maintenance 52
Mounting surface requirements 22

N

NMEA 0183
  Baud rate 43

O

Operation instructions, LightHouse 3 14

P

Parts supplied
  Axiom Pro 12 19
  Axiom Pro 16 20
  Axiom Pro 9 19
Power cable extension 40
Power connection 37
Power troubleshooting 57
Product support 68
Product variants 15

R

Radio Frequency (RF) interference 23
RCR-SDUSB 14
Routine checks 52

S

Service Center 68
Servicing 52
Sharing a breaker 39

T

Technical support 68
Transducer connections 35
Troubleshooting 56
  GNSS 58

V

Ventilation 22

W

Warranty 68

Raymarine
Marine House, Cartwright Drive, Fareham, Hampshire.
PO15 5RJ. United Kingdom.

Tel: +44 (0)1329 246 700

www.raymarine.com

a brand by FLIR

Raymarine®

QUANTUM

Installation instructions

English (en-US)
Date: 06-2018
Document number: 87209-6
© 2018 Raymarine UK Limited

Trademark and patents notice

Raymarine, **Tacktick**, **Clear Pulse**, **Truzoom**, **SeaTalk**, **SeaTalk hs**, **SeaTalk ng**, and **Micronet**, are registered or claimed trademarks of Raymarine Belgium.

FLIR, **LightHouse**, **DownVision**, **SideVision**, **RealVision**, **Dragonfly**, **Quantum**, **Axiom**, **Instalert**, **Infrared Everywhere**, **The World's Sixth Sense** and **ClearCruise** are registered or claimed trademarks of FLIR Systems, Inc.

All other trademarks, trade names, or company names referenced herein are used for identification only and are the property of their respective owners.

This product is protected by patents, design patents, patents pending, or design patents pending.

Fair Use Statement

You may print no more than three copies of this manual for your own use. You may not make any further copies or distribute or use the manual in any other way including without limitation exploiting the manual commercially or giving or selling copies to third parties.

Software updates

Check the Raymarine website for the latest software releases for your product.
www.raymarine.com/software

Product documentation

The latest versions of all English and translated documents are available to download in PDF format from the website: www.raymarine.com/manuals.
Please check the website to ensure you have the latest documentation.

Copyright ©2018 Raymarine UK Ltd. All rights reserved.

English (en-US)
Document number: 87209-6
AE;9161;2018-06-01T07:54:40

Contents

Chapter 1 Important information 9

Certified Installation 9
Transmitted power density levels 10
IEEE statement 10
ICNIRP Guidelines 10
Water ingress 10
Disclaimer 10
EMC installation guidelines 10
Compass safe distance 11
Declaration of Conformity 11
Connections to other equipment 11
Product disposal 11
Warranty registration 12
IMO and SOLAS 12
Radar licensing 12
FCC Notice - Radar 12
MSIP Warning Statement for Radio Devices (Korea only) 12
Technical accuracy 13
Operation instructions 13
Retain your Wi-Fi passcode 13

Chapter 2 Document and product information 15

2.1 Document information 16
Applicable products 16
Document illustrations 16
Product documentation 16
LightHouse MFD Operation instructions 17
2.2 Parts supplied 18
2.3 Quantum Radome product overview 19
Multiple Quantum Radar scanners 19

Chapter 3 Planning the installation 21

3.1 Installation checklist 22
Schematic diagram 22
Warnings and cautions 22
3.2 Required additional components 23
MARPA / Auto acquisition data source requirements 23
Operation instructions 23
Retain your Wi-Fi passcode 23
3.3 Multifunction display compatibility 24
Compatible multifunction displays 24
Incompatible multifunction displays 24

3.4 Multifunction display software requirements 25
Software updates 25
3.5 Tools required 26
3.6 Typical systems 27
3.7 Product dimensions 29
3.8 Location requirements 31
Shadow areas and false echoes 31
Radar scanner mounting angle 32
Multiple Radar scanners — location requirements 32
3.9 Quantum Wi-Fi only installation requirements 33
Wi-Fi Signal Reflection 35
Wireless location requirements 36
Pre-installation site survey — Wi-Fi Analyzer 36
Pre-installation site survey — Raymarine app 38
Chapter 4 Cables and connections (Quantum variant with RayNet) 41
4.1 Wi-Fi only Quantum variants 42
4.2 General cabling guidance 43
Cable types and length 43
Routing cables 43
Strain relief 43
Circuit isolation 43
Cable shielding 43
Suppression ferrites 44
4.3 Connections overview 45
Typical cable routing scenarios 46
Cable routing — platform mount 46
Cable routing — pole mount 49
Making connections 51
4.4 Power connection 52
In-line fuse and thermal breaker ratings 52
Power cable extension 52
Power distribution 52
4.5 Network connection 56
Chapter 5 Cables and connections (Quantum variant with Wi-Fi only) 59
5.1 General cabling guidance 60
Cable types and length 60
Routing cables 60
Strain relief 60
Circuit isolation 60
Cable shielding 60
Suppression ferrites 61

5.2 Power cable routing (Wi-Fi variant only) 62
5.3 Power connection 64
In-line fuse and thermal breaker ratings 64
Power cable extension 64
Power distribution 64
Chapter 6 Mounting 69
6.1 Mounting pre-requisite: "breather" holes 70
6.2 Mounting the scanner 71
Multiple Quantum Radar scanners 74
Multiple Radar scanners — location requirements 74
6.3 Radar scanner protection — sailing vessels 75
Chapter 7 System checks and troubleshooting 77
7.1 Post installation procedures 78
Mechanical checks 78
Connecting to a Radar scanner over RayNet 78
Powering on a Quantum Radar 78
Pairing with a Quantum Radar using Wi-Fi 78
MFD access point connection when connected to Quantum Wi-Fi 80
Standby and sleep modes for Wi-Fi connections 80
Retain your Wi-Fi passcode 80
Operation instructions 80
MARPA / Auto acquisition data source requirements 81
7.2 Troubleshooting 82
Troubleshooting procedure 83
Multiple Quantum Radars — more information 83
Retain your Wi-Fi passcode 84
Wi-Fi troubleshooting 84
Operation instructions 86
Chapter 8 Maintenance 87
8.1 Maintenance 88
Unit cleaning instructions 88
Chapter 9 Technical support 89
9.1 Raymarine product support and servicing 90
9.2 Viewing product information 92
Chapter 10 Technical specification 93
10.1 Technical specification 94
Chapter 11 Spares and accessories 97
11.1 Quantum Radar accessories 98
11.2 Network hardware 99
11.3 Network cable connector types 100

11.4 RayNet to RayNet cables and connectors 101
11.5 RayNet to RJ45 adapter cables 102

Chapter 1: Important information

Certified Installation

Raymarine recommends certified installation by a Raymarine approved installer. A certified installation qualifies for enhanced product warranty benefits. Contact your Raymarine dealer for further details, and refer to the separate warranty document packed with your product.

Warning: Product installation and operation

- This product must be installed and operated in accordance with the instructions provided. Failure to do so could result in personal injury, damage to your vessel and/or poor product performance.
- Raymarine recommends certified installation by a Raymarine approved installer. A certified installation qualifies for enhanced product warranty benefits. Contact your Raymarine dealer for further details, and refer to the separate warranty document packed with your product.

Warning: Potential ignition source

This product is NOT approved for use in hazardous/flammable atmospheres. Do NOT install in a hazardous/flammable atmosphere (such as in an engine room or near fuel tanks).

Warning: Positive ground systems

Do not connect this unit to a system which has positive grounding.

Warning: Power supply voltage

Connecting this product to a voltage supply greater than the specified maximum rating may cause permanent damage to the unit. Refer to the *Technical specification* section for voltage rating.

Warning: Switch off power supply

Ensure the vessel's power supply is switched OFF before starting to install this product. Do NOT connect or disconnect equipment with the power switched on, unless instructed in this document.

Caution: Power supply protection

When installing this product ensure the power source is adequately protected by means of a suitably-rated fuse or automatic circuit breaker.

Warning: High voltages

This product may contain high voltages. Do NOT remove any covers or otherwise attempt to access internal components, unless specifically instructed in the documentation provided.

Warning: Radio frequency radiation hazard

The radar scanner transmits electromagnetic energy at microwave frequencies which can be harmful, particularly to the eyes. Do NOT look at the scanner from close range. Ensure personnel are clear of the scanner when it is powered on.

For safety reasons, the radar must be installed above head height, out of range of personnel.

Warning: Quantum Wi-Fi connection

During installation there will usually be structure that affects the Wi-Fi signal. Before using the Radar for navigation, ensure you test the reliability of your Wi-Fi connection in open waters and away from any other vessels or structure.

Caution: Service and maintenance

This product contains no user serviceable components. Please refer all maintenance and repair to authorized Raymarine dealers. Unauthorized repair may affect your warranty.

Transmitted power density levels

- A power density level of 10 W/m^2 does not occur at any point.
- A power density level of 100 W/m^2 does not occur at any point.

IEEE statement

IEEE C95.1 – 2005 – Standard for Safety Levels with respect to Human Exposure to Radio Frequency Electromagnetic Fields, 3 kHz to 300 GHz.

ICNIRP Guidelines

When properly installed and operated, the use of this Radar conforms to: ICNIRP Guidelines 1998 - International Commission on Non-Ionising Radiation Protection: Guidelines for limiting exposure to time-varying electric, magnetic and electro-magnetic fields (up to 300 GHz) 1998.

Water ingress

Water ingress disclaimer

Although the waterproof rating capacity of this product meets the stated IPX standard (refer to the product's *Technical Specification*), water intrusion and subsequent equipment failure may occur if the product is subjected to commercial high-pressure washing. Raymarine will not warrant products subjected to high-pressure washing.

Disclaimer

Raymarine does not warrant that this product is error-free or that it is compatible with products manufactured by any person or entity other than Raymarine.

Raymarine is not responsible for damages or injuries caused by your use or inability to use the product, by the interaction of the product with products manufactured by others, or by errors in information utilized by the product supplied by third parties.

EMC installation guidelines

Raymarine equipment and accessories conform to the appropriate Electromagnetic Compatibility (EMC) regulations, to minimize electromagnetic interference between equipment and minimize the effect such interference could have on the performance of your system

Correct installation is required to ensure that EMC performance is not compromised.

Note: In areas of extreme EMC interference, some slight interference may be noticed on the product. Where this occurs the product and the source of the interference should be separated by a greater distance.

For **optimum** EMC performance we recommend that wherever possible:

- Raymarine equipment and cables connected to it are:
  - At least 1 m (3 ft) from any equipment transmitting or cables carrying radio signals e.g. VHF radios, cables and antennas. In the case of SSB radios, the distance should be increased to 7 ft (2 m).
  - More than 2 m (7 ft) from the path of a radar beam. A radar beam can normally be assumed to spread 20 degrees above and below the radiating element.
- The product is supplied from a separate battery from that used for engine start. This is important to prevent erratic behavior and data loss which can occur if the engine start does not have a separate battery.
- Raymarine specified cables are used.
- Cables are not cut or extended, unless doing so is detailed in the installation manual.

Note: Where constraints on the installation prevent any of the above recommendations, always ensure the maximum possible separation between different items of electrical equipment, to provide the best conditions for EMC performance throughout the installation

Compass safe distance

To prevent potential interference with the vessel's magnetic compasses, ensure an adequate distance is maintained from the product.

When choosing a suitable location for the product you should aim to maintain the maximum possible distance from any compasses. Typically this distance should be at least 1 m (3 ft) in all directions. However for some smaller vessels it may not be possible to locate the product this far away from a compass. In this situation, when choosing the installation location for your product, ensure that the compass is not affected by the product when it is in a powered state.

Declaration of Conformity

FLIR Belgium BVBA declares that the radio equipment type Quantum radome radar scanners, part numbers E70210 and E70344, are in compliance with the Radio Equipment Directive 2014/53/EU.

The original Declaration of Conformity certificate may be viewed on the relevant product page at www.raymarine.com/manuals.

Connections to other equipment

Requirement for ferrites on non-Raymarine cables

If your Raymarine equipment is to be connected to other equipment using a cable not supplied by Raymarine, a suppression ferrite MUST always be attached to the cable near the Raymarine unit.

Product disposal

Dispose of this product in accordance with the WEEE Directive.

The Waste Electrical and Electronic Equipment (WEEE) Directive requires the recycling of waste electrical and electronic equipment which contains materials, components and substances that may be hazardous and present a risk to human health and the environment when WEEE is not handled correctly.

Equipment marked with the crossed-out wheeled bin symbol indicates that the equipment should not be disposed of in unsorted household waste.

Local authorities in many regions have established collection schemes under which residents can dispose of waste electrical and electronic equipment at a recycling center or other collection point.

For more information about suitable collection points for waste electrical and electronic equipment in your region, refer to the following table:

Region	Website	Region	Website
AT	www.araplus.at	IT	www.erp-recycling.org/it-it
BE	www.recupel.be	LT	www.eei.lt
BG	www.greentech.bg	LU	www.ecotrel.lu, https://aev.gouvernement.lu/fr.html
CY	www.electrocyclosis.com.cy	LV	www.lze.lv
CZ	www.retela.cz	MT	http://www.greenpak.com.mt
DE	www.earn-service.com	NL	www.wecycle.nl
DK	www.elretur.dk	PL	www.electro-system.pl
EE	www.elektroonikaromu.ee	PT	www.amb3e.pt
ES	www.raee-asimelec.es	RO	www.ecotic.ro
FI	www.elker.fi	SE	www.el-kretsen.se
FR	www.ecologic-france.com, www.eco-systemes.fr	SI	www.zeos.si
GR	www.electrocycle.gr	SK	www.erp-recycling.sk
IE	www.weeeireland.ie	UK	www.wastecare.co.uk/compliance-services/weeecare

Warranty registration

To register your Raymarine product ownership, please visit www.raymarine.com and register online.

It is important that you register your product to receive full warranty benefits. Your unit package includes a bar code label indicating the serial number of the unit. You will need this serial number when registering your product online. You should retain the label for future reference.

IMO and SOLAS

The equipment described within this document is intended for use on leisure marine boats and workboats NOT covered by International Maritime Organization (IMO) and Safety of Life at Sea (SOLAS) Carriage Regulations.

Radar licensing

Installation and operation of this radar may be subject to individual licensing of the equipment, operator or vessel. You are strongly advised to check with the requirements of the licensing authority of your national administration. In case of any difficulties, contact your local Raymarine dealer.

FCC Notice - Radar

Changes or modifications to this equipment not expressly approved in writing by Raymarine Incorporated could violate compliance with FCC rules and void the operator's authority to operate the equipment.

MSIP Warning Statement for Radio Devices (Korea only)

- 제작자 및 설치자는 해당 무선설비가 전파혼신 가능성이 있으므로 안전 인명과 관련된
- 서비스는 할 수 없음을 사용자 설명서 등을 통하여 운용자 및 사용자에게 충분히 알릴 것

- 법에 의해 전 방향 전파 발사 및 동일한 정보를 동시에 여러 곳으로 송신하는 점-대-다지점 서비스에의 사용은 금지되어 있습니다.

Technical accuracy

To the best of our knowledge, the information in this document was correct at the time it was produced. However, Raymarine cannot accept liability for any inaccuracies or omissions it may contain. In addition, our policy of continuous product improvement may change specifications without notice. As a result, Raymarine cannot accept liability for any differences between the product and this document. Please check the Raymarine website (www.raymarine.com) to ensure you have the most up-to-date version(s) of the documentation for your product.

Operation instructions

For detailed operation instructions for your product, refer to the documentation that accompanies your display.

All product documentation is available to download from the Raymarine website: www.raymarine.com/manuals.

Retain your Wi-Fi passcode

To connect to the Radar using Wi-Fi (wireless), you will need to know the unit's **SSID**, and **Passcode**.

Both the SSID and Passcode are provided on the serial number label on the underside of the unit, and on spare serial number labels supplied in the box. You may wish to make a separate note of this information and keep in a secure location. You should also keep the Radar scanner packaging in a safe place for future reference.

Chapter 2: Document and product information

Chapter contents

- 2.1 Document information on page 16
- 2.2 Parts supplied on page 18
- 2.3 Quantum Radome product overview on page 19

2.1 Document information

This document contains important information related to the installation of your Raymarine product.

The document includes information to help you:

- plan your installation and ensure you have all the necessary equipment;
- install and connect your product as part of a wider system of connected marine electronics;
- troubleshoot problems and obtain technical support if required.

This and other Raymarine product documents are available to download in PDF format from www.raymarine.com/manuals.

Applicable products

This document is applicable to the following products:

	Part number	Name	Description
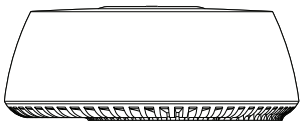	E70210	Quantum™ Q24C Radome	Quantum™ Radar scanner with RayNet and Wi–Fi connections. Supplied with a 10 m power cable.
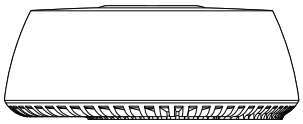	E70344	Quantum™ Q24W Radome	Quantum™ Radar scanner with Wi–Fi connection only. Supplied with a 10 m power cable.

Special bundle and promotional products

From time to time, Raymarine may supply certain products as special “bundle”, “package”, or “promotional” variants.

These bundles typically include additional accessories such as cables, and usually have a Txxxxx part number. For these bundle variants, the provided parts supplied and part numbers may differ slightly from those stated in this document. However, the core supplied product and its features will remain the same as those described in this document. To ensure that you are using the correct documentation for your product, please:

- Refer to the product’s core model number, which can be found listed on the label on the rear or underside of your product, or accessed from any Raymarine multifunction display via the Diagnostics page. Ensure that the number matches one of those listed in the “Applicable products” section of your product documentation.
- Alternatively, contact the place of purchase and request the information. You may need to provide the product’s serial number, which can be found on the product packaging and also on the label on the rear or underside of the unit.

Document illustrations

Your product and if applicable, its user interface may differ slightly from that shown in the illustrations in this document, depending on product variant and date of manufacture.

All images are provided for illustration purposes only.

Product documentation

The following documentation is applicable to your product:

Description	Part number
Quantum™ Radome Installation instructions Installation of a Quantum™ Radar scanner and connection to a wider system of marine electronics.	87209 / 88055
Quantum™ Radome Mounting template Mounting diagram for surface mounting a Quantum™ Radar scanner.	87257

Description	Part number
LightHouse™ 2 MFD Operation Instructions Details the operation of the Radar application for multifunction displays running LightHouse™ 2 software.	81360
LightHouse™ 3 MFD Advanced Operation Instructions Details the operation of the Radar application for multifunction displays running LightHouse™ 3 software.	81370

LightHouse MFD Operation instructions

For detailed operation instructions for your product, refer to the documentation that accompanies your display.

	All product documentation is available to download from the Raymarine website: www.raymarine.com/manuals • LightHouse™ 2 MFD document number: 81360 • LightHouse™ 3 MFD document number: 81370

2.2 Parts supplied

The following items are supplied with your product.

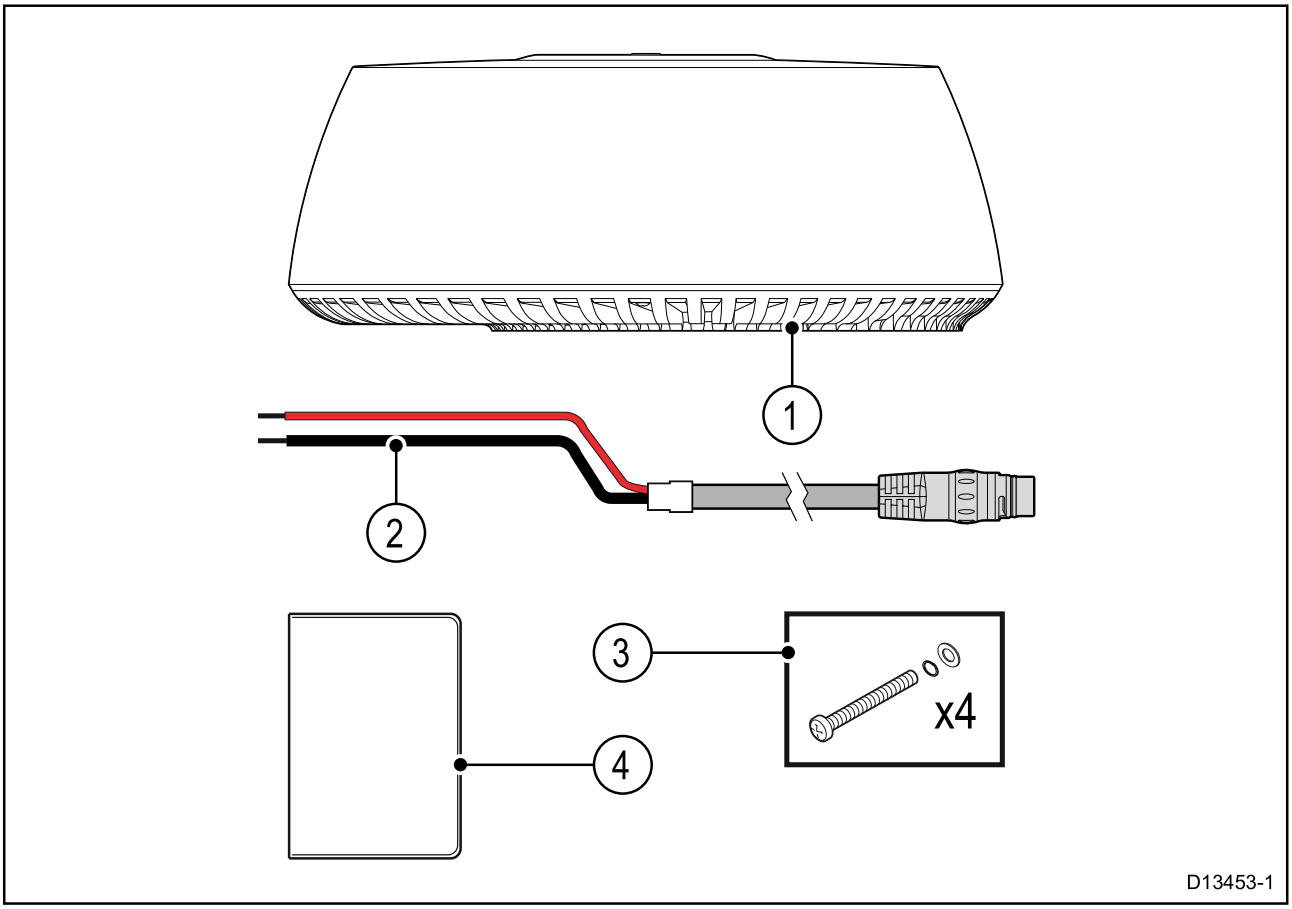

Item	Description	Quantity
1	Quantum™ Radome	1
2	10 m (32.8 ft.) Power cable	1
3	M8 mounting bolts with spring washers and flat washers	4
4	Documentation pack (including mounting template)	1

Note: The list of parts supplied with your Quantum™ variant may differ slightly from the list provided here. Please be aware that, from time to time, Raymarine may supply certain products as special “bundle”, “package”, or “promotional” variants, which may contain different accessories compared to the core product variants described in this document. Refer to **Special bundle and promotional products** for more information.

2.3 Quantum Radome product overview

The Quantum™ Radome is a compact, solid-state Radar scanner, utilizing CHIRP pulse compression for improved range resolution, and Wi-Fi connectivity for easier installation. In conjunction with a compatible multifunction display, the Quantum™ scanner provides a map-like representation of the area around your vessel, enabling you to identify other vessels, buoys, and land features such as coastlines and hills.

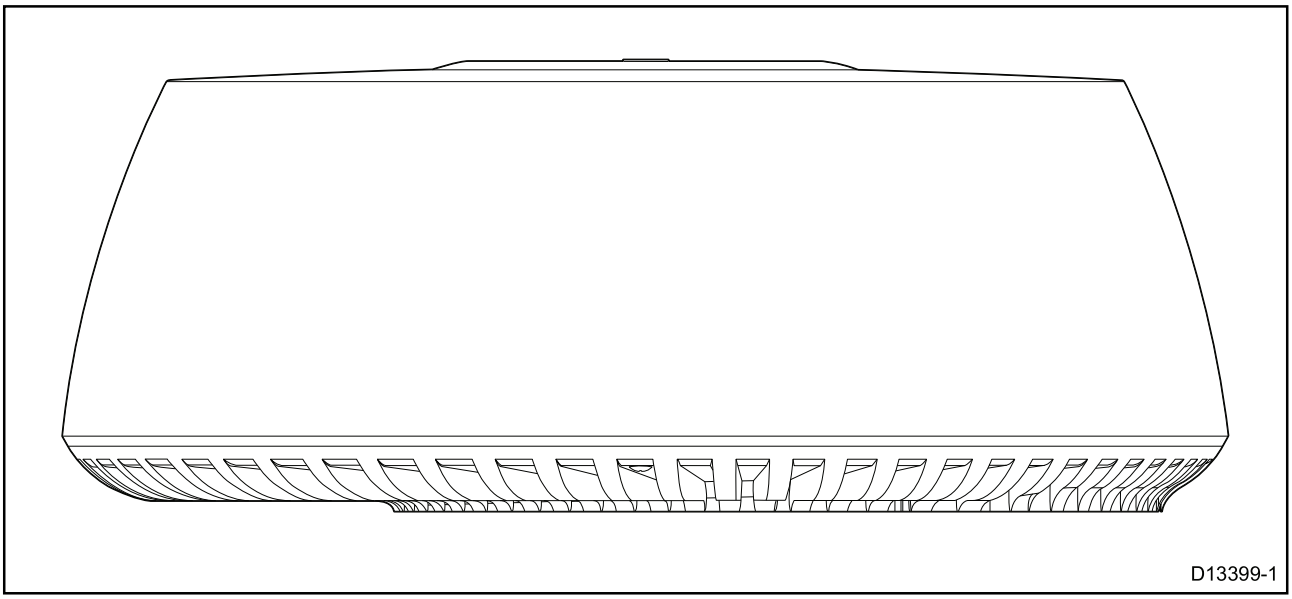

The Quantum™ Radome has the following features:

- Solid-state technology (no magnetron) for improved efficiency, and rapid start-up.
- Range performance up to 24 nm (dependent on installation location).
- CHIRP pulse compression for improved target range resolution, and reduced background noise.
- Data connection via Wi-Fi, or (E70210 only) Raynet cable.
- Radar image display and control via Raymarine multifunction display.
- 24 RPM scanner rotation.
- Low power consumption.
- 12 V or 24 V operation.
- Waterproof to IPX 6.

Multiple Quantum Radar scanners

Only 1 (one) Quantum™ Radar scanner can be used at any one time, per networked system.

If you have more than one Quantum™ Radar scanner installed on your vessel and want to use them at the same time, the multifunction displays to which the scanners are connected must NOT be networked together. This applies to Quantum™ scanners connected either wired or wirelessly.

For more information, refer to: **Multiple Quantum Radars — more information**.

Chapter 3: Planning the installation

Chapter contents

- 3.1 Installation checklist on page 22
- 3.2 Required additional components on page 23
- 3.3 Multifunction display compatibility on page 24
- 3.4 Multifunction display software requirements on page 25
- 3.5 Tools required on page 26
- 3.6 Typical systems on page 27
- 3.7 Product dimensions on page 29
- 3.8 Location requirements on page 31
- 3.9 Quantum Wi-Fi only installation requirements on page 33

3.1 Installation checklist

Installation includes the following activities:

	Installation Task
1	Plan your system.
2	Obtain all required equipment and tools.
3	Site all equipment.
4	Route all cables.
5	Drill cable and mounting holes.
6	Make all connections into equipment.
7	Secure all equipment in place.
8	Power on and test the system.

Schematic diagram

A schematic diagram is an essential part of planning any installation. It is also useful for any future additions or maintenance of the system. The diagram should include:

- Location of all components.
- Connectors, cable types, routes and lengths.

Warnings and cautions

Important: Before proceeding, ensure that you have read and understood the warnings and cautions provided in the Chapter 1 **Important information** section of this document.

3.2 Required additional components

This product forms part of a system of electronics and requires the following additional components for full operation.

- Compatible Raymarine multifunction display. Refer to **Compatible multifunction displays** for a list of compatible multifunction displays.
- Optional data cable (NOT applicable to Wi-Fi only variant). Refer to Chapter 11 **Spares and accessories** for suitable cables and adaptors for existing cable installations. (The Quantum™ scanner is Wi-Fi-enabled, and can be operated without a fixed data cable.)

MARPA / Auto acquisition data source requirements

Use of the MARPA/Auto acquisition Radar features requires the following data sources to be available on your system (e.g. connected to your multifunction display, via SeaTalkng ® or NMEA 0183).

Data type	Example data source
COG (Course Over Ground)	GPS or GNSS receiver (MFD internal receiver or external receiver).
SOG (Speed Over Ground)	GPS or GNSS receiver (MFD internal receiver or external receiver).
HDG / HDT (True Heading)	Compass or Autopilot sensor providing Fastheading data (e.g. Evolution EV-1 / EV-2).

Operation instructions

For detailed operation instructions for your product, refer to the documentation that accompanies your display.

All product documentation is available to download from the Raymarine website: www.raymarine.com/manuals.

Retain your Wi-Fi passcode

To connect to the Radar using Wi-Fi (wireless), you will need to know the unit's **SSID**, and **Passcode**.

Both the SSID and Passcode are provided on the serial number label on the underside of the unit, and on spare serial number labels supplied in the box. You may wish to make a separate note of this information and keep in a secure location. You should also keep the Radar scanner packaging in a safe place for future reference.

3.3 Multifunction display compatibility

Compatible multifunction displays

This product is compatible with only LightHouse™-powered Raymarine multifunction displays.

LightHouse™ MFDs:

	Product variants		Product variants
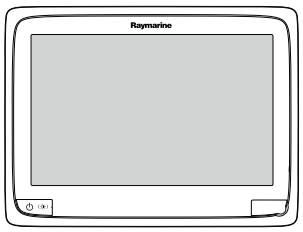	a Series	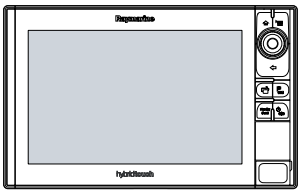	eS Series
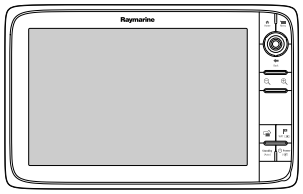	c Series	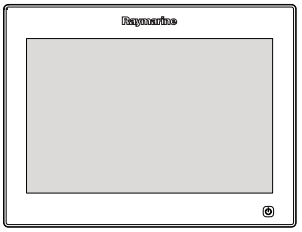	gS Series
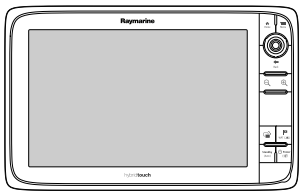	e Series	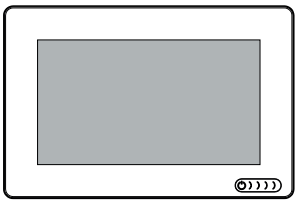	Axiom
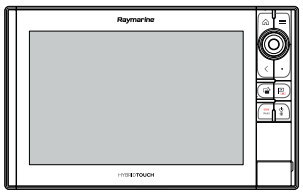	Axiom Pro / Pro-S	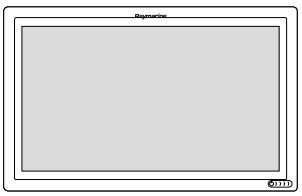	Axiom XL

Non-Wi-Fi multifunction displays

E70076 (a65) and E70077 (a67) a Series LightHouse™ multifunction displays do NOT support Wi-Fi connections. These displays are NOT compatible with products that connect via Wi-Fi only.

Incompatible multifunction displays

This product is NOT compatible with the following legacy Raymarine multifunction displays.

Legacy MFDs

	Product variants		Product variants
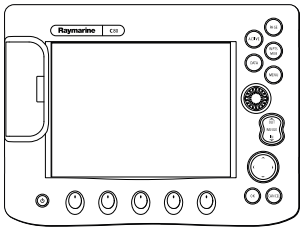	C-Series Classic C70, C80, C120 E-Series Classic E80, E120	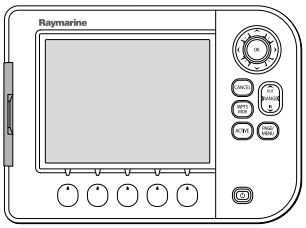	A-Series Classic A50, A50D, A57D, A70, A70D
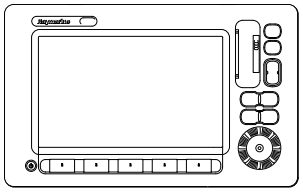	C-Series Widescreen C90W, C120W, C140W E-Series Widescreen E90W, E120W, E140W	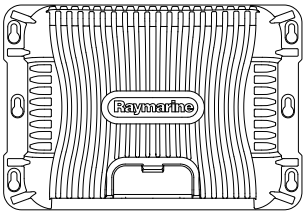	G-Series GPM400

3.4 Multifunction display software requirements

The operation of this product requires that your MFD is running Raymarine LightHouse™ software.

MFD software	Required version
LightHouse™ 2	17 or later
LightHouse™ 3	3.1 or later

Note:

- The latest MFD software can be obtained by visiting www.raymarine.com/software.
- The website also includes information on how to upgrade your product software.

Caution: Installing software updates

The software update process is carried out at your own risk. Before initiating the update process ensure you have backed up any important files.

Ensure that the unit has a reliable power supply and that the update process is not interrupted.

Damage caused by incomplete updates are not covered by Raymarine warranty.

By downloading the software update package, you agree to these terms.

Software updates

The software running on the product can be updated.

- Raymarine periodically releases software updates to improve product performance and add new features.
- The software on many products can be updated using a connected and compatible multifunction display (MFD).
- Refer to www.raymarine.com/software/ for the latest software updates and the software update procedure for your specific product.

Important:

- To prevent potential software-related issues with your product, always follow the relevant update instructions carefully and in the sequence provided.
- If in doubt as to the correct procedure for updating your product software, refer to your dealer or Raymarine technical support.

3.5 Tools required

Product installation requires the following tools:

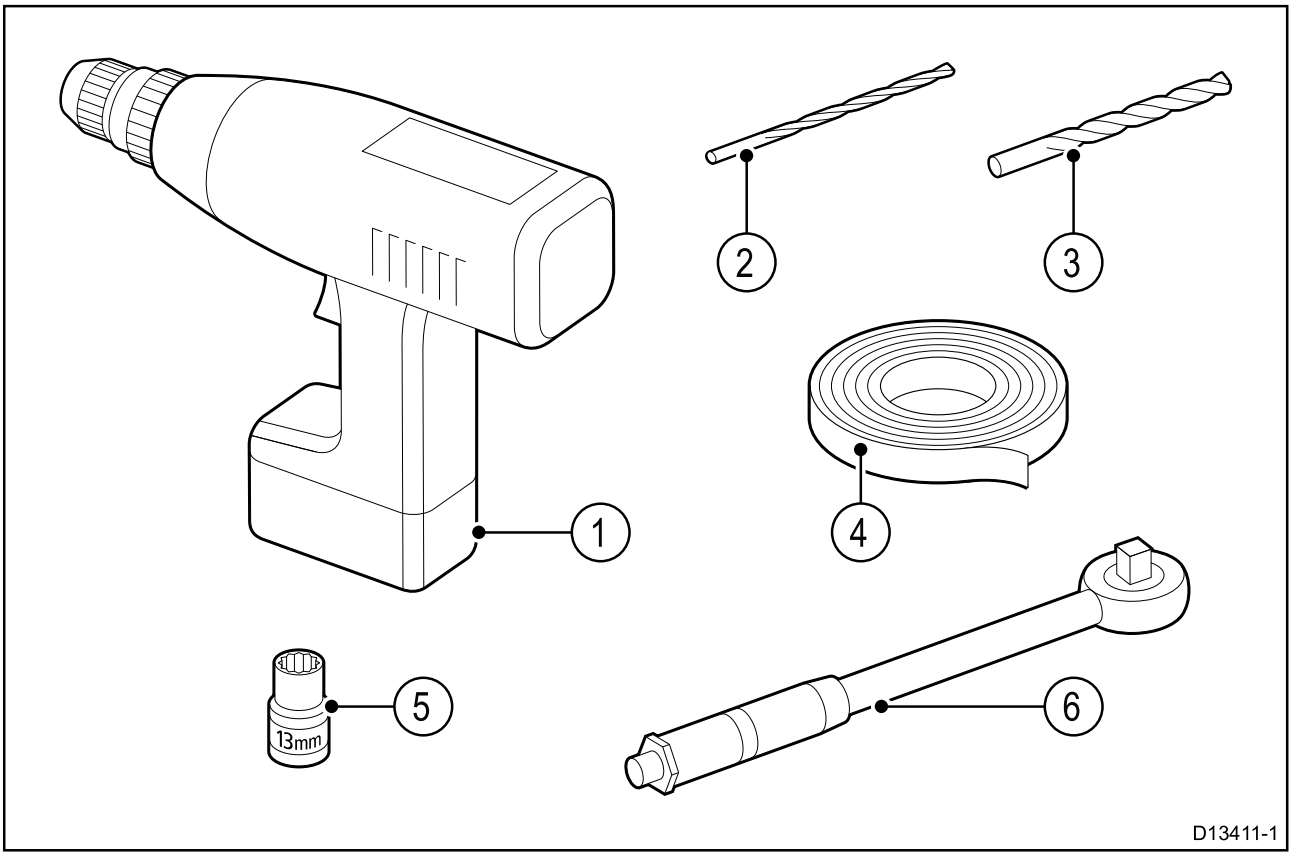

Item number	Description	Quantity
1	Power drill	1
2	3 mm drill bit	1
3	10 mm drill bit	1
4	Adhesive tape	1
5	13 mm socket	1
6	Torque wrench	1

3.6 Typical systems

Note: The following illustrations show the various products that can be connected in a typical system. These systems are shown as an example only and may differ from your planned installation.

- For information on how to connect the products, refer to the relevant *Cables and connections* section for your Quantum variant.
- For information on available cables and accessories, refer to the Chapter 11 **Spares and accessories** section.

Example: basic Radar system (wired data connection)

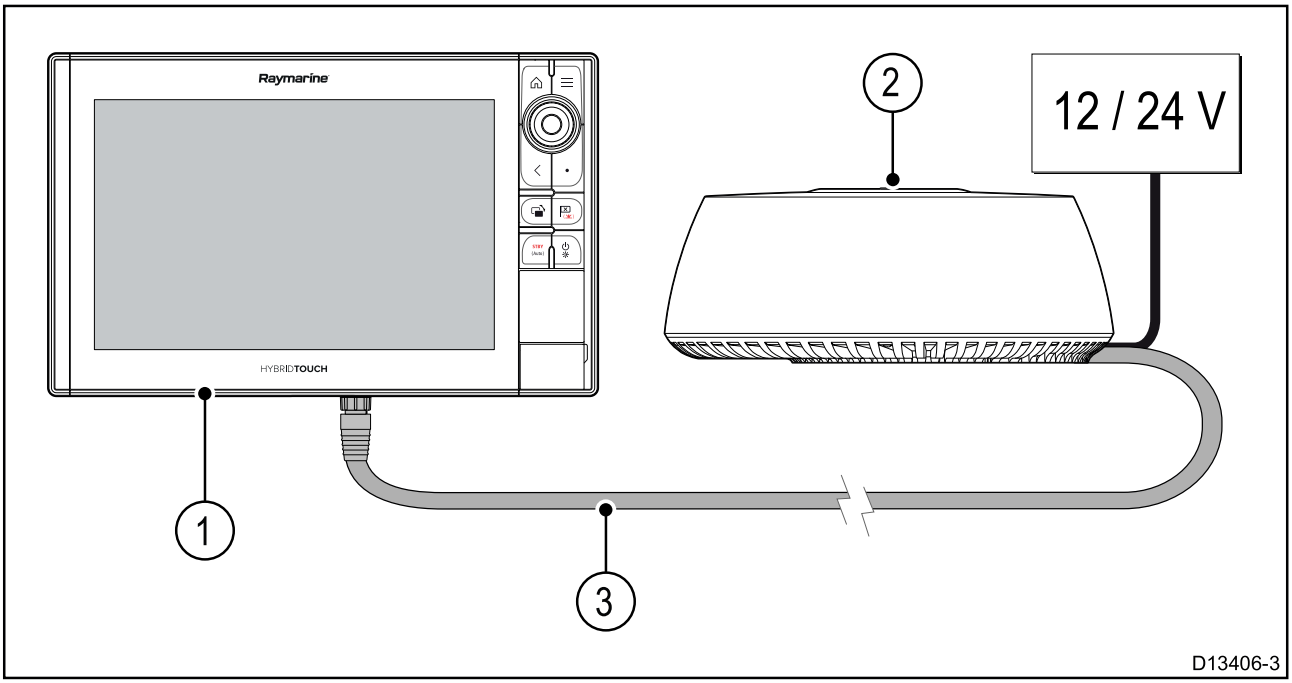

Note: This example is NOT applicable to the Wi-Fi-only Quantum™ variant.

Item	Description
1	Multifunction display
2	Quantum™ Radome
3	RayNet data cable

Example: basic Radar system (wireless data connection)

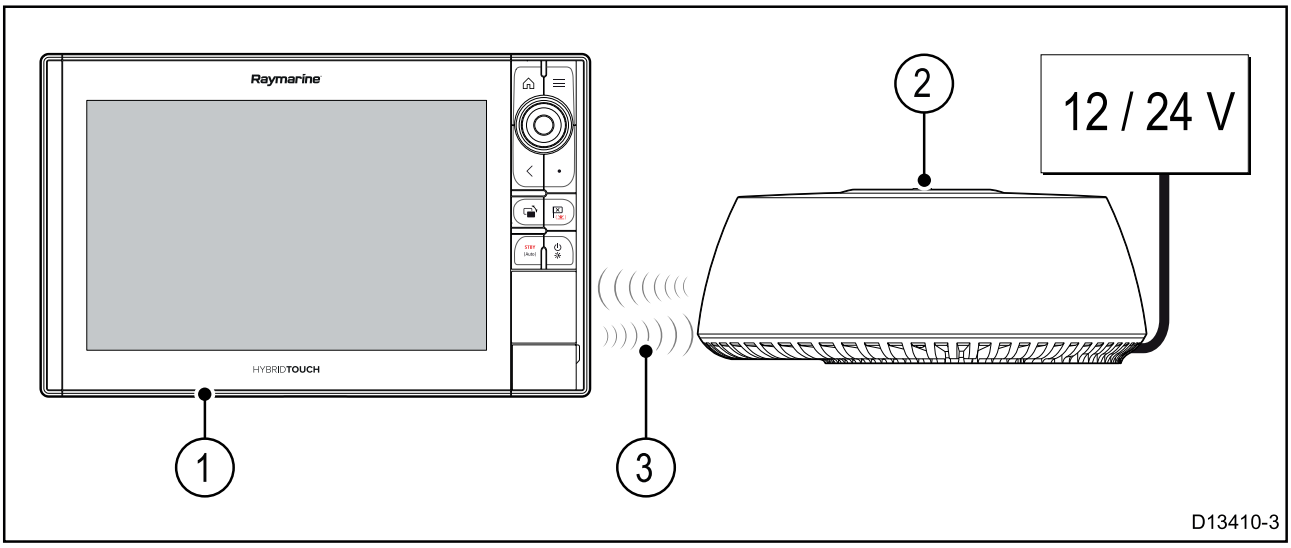

Item	Description
1	Multifunction display
2	Quantum™ Radome
3	Wi-Fi datalink

3.7 Product dimensions

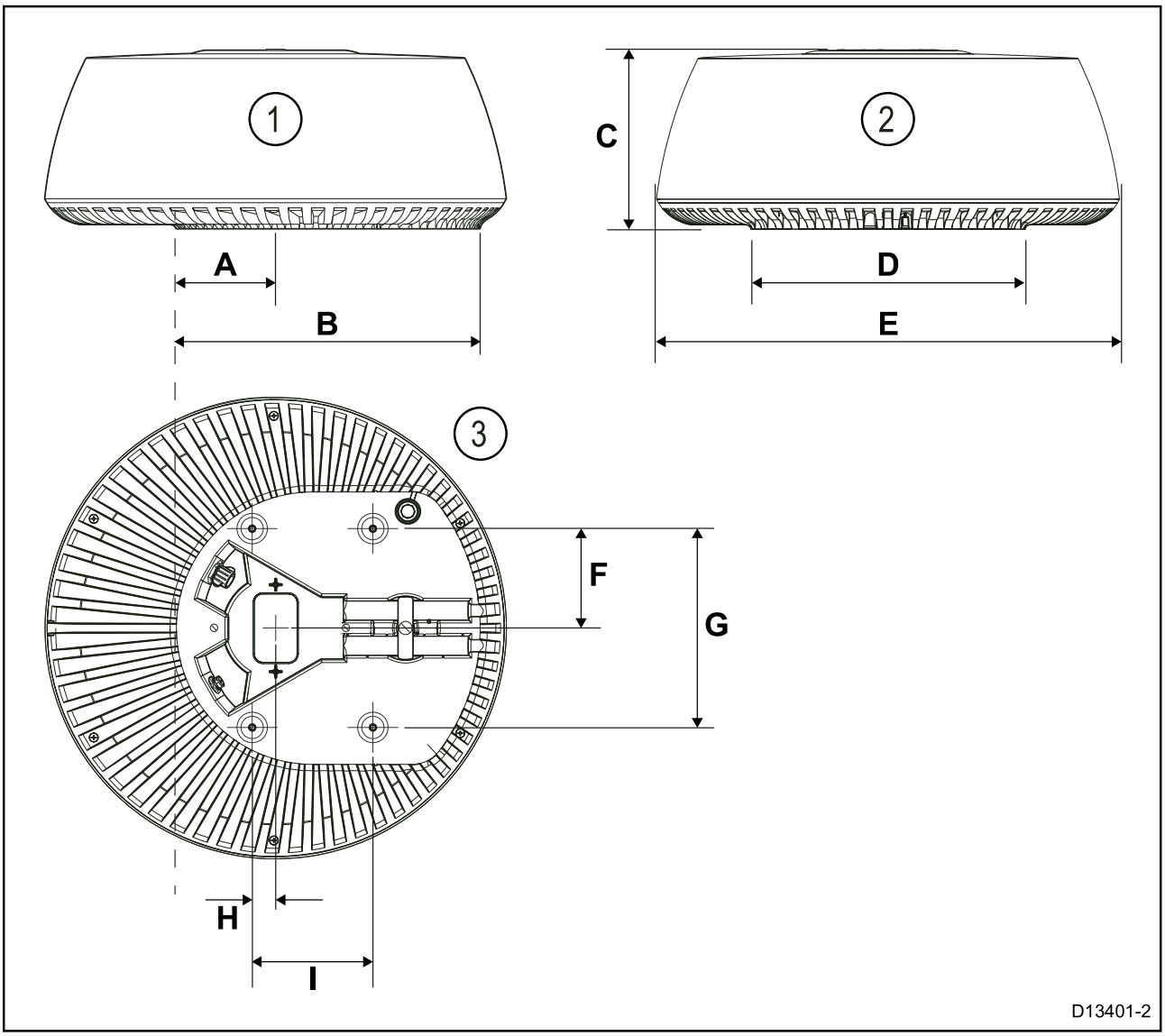

1. Side view of scanner.
2. Rear view of scanner.
3. Underside view of scanner.

Dimension	Measurement	Description
A	116.0 mm (4.57 in.)	Distance from centerline of scanner to front of mounting base.
B	355.0 mm (13.98 in.)	Distance from rear of mounting base to front of mounting base.
C	209.5 mm (8.25 in.)	Height of radar scanner.
D	319.5 mm (12.58 in.)	Mounting base width (rear of unit).
E	541.0 mm (21.30 in.)	Width of scanner.
F	116.5 mm (4.59 in.)	Distance from centerline to rear mounting hole.
G	233.0 mm (9.17 in.)	Distance between mounting holes.

Dimension	Measurement	Description
H	27.5 mm (1.08 in.)	Distance from centerline to front mounting hole.
I	141.5 mm (5.57 in.)	Distance between front and rear mounting holes.

3.8 Location requirements

The optimum height for the Quantum™ scanner is a location that is high enough above the waterline to give a long range line-of-sight to the horizon, but not so high as to be adversely affected by the vessel's pitching and rolling.

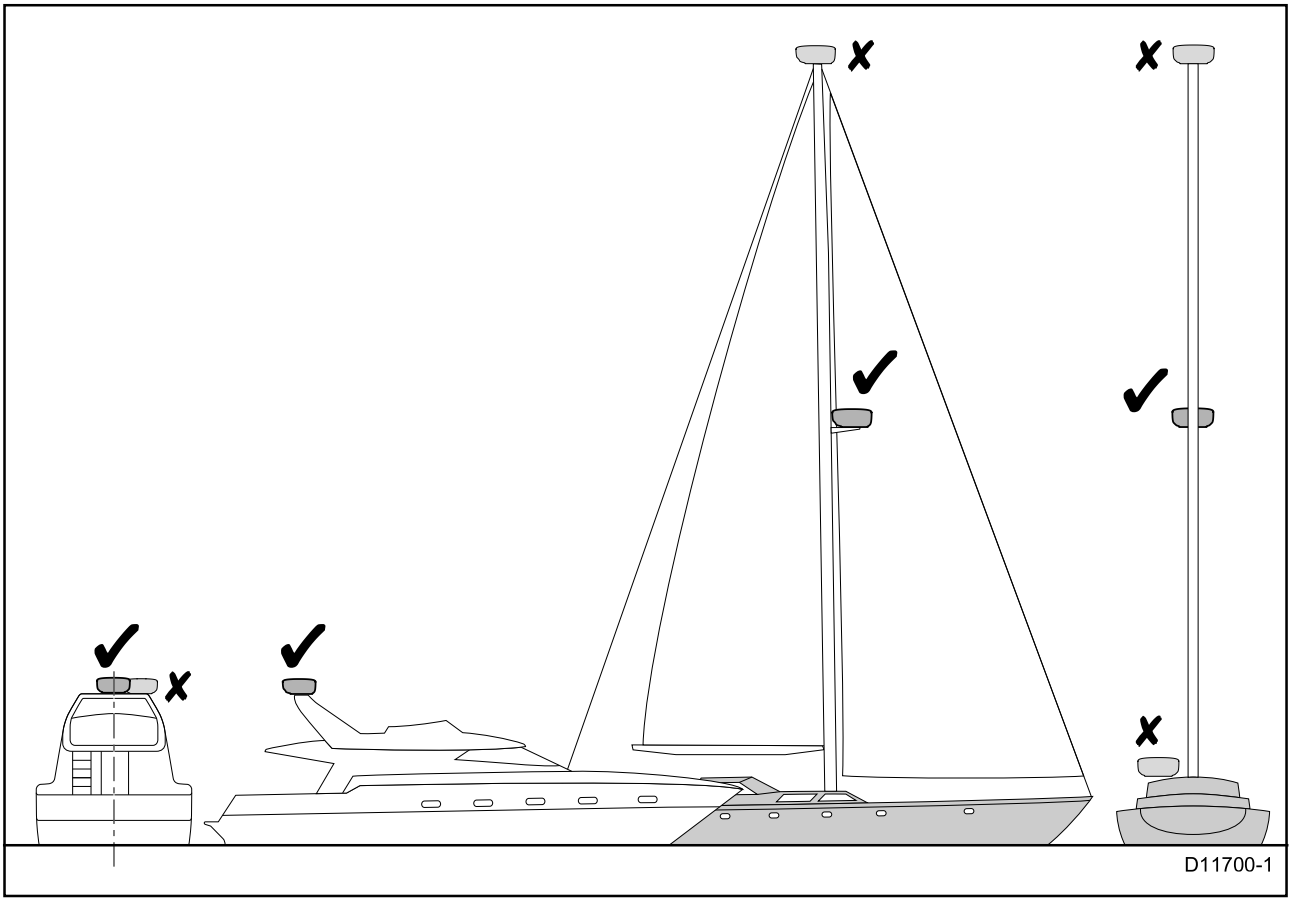

The scanner must also be mounted where it is:

- Above head height.
- Easily accessible.
- As near as possible to the vessel's centerline.
- On a rigid and stable platform, capable of securely supporting the scanner under seagoing conditions.
- Clear of large objects such as the flybridge, large engine stacks, searchlights, horns, masts etc. (see **Shadow areas and false echoes** for additional information).
- Clear of heat and fumes.
- At least 1 m (3 ft) from a magnetic compass or other scanners.

Shadow areas and false echoes

Mount the Radar scanner away from large structures or equipment, such as engine stacks, searchlights, horns, or masts. These objects may cause shadow areas and false echoes. For example, if you mount the Radar scanner on a mast, echoes from other targets may be reflected from the mast. Wet sails may also cause shadow areas, so Radar performance may be reduced in the rain. It is particularly important to avoid shadow areas near the bow. Raising or even lowering the Radar scanner may help to reduce these effects.

In shadow areas beyond the obstruction there will be a reduction of the beam intensity. There may be a blind sector if the beam intensity is not sufficient to obtain an echo from an object. This may occur even at close range. For this reason the angular width and relative bearing of any shadow area must be determined at installation.

You may be able to detect shadow areas or false echoes on your multifunction display. For example, sea clutter can be used as a good indicator of blind arcs. Dark sectors on the Radar display indicate possible shadowed areas. This information should be posted near the display unit and operators must be alert for targets in these blind areas.

Radar scanner mounting angle

Ensure the Radar scanner rotates parallel to the water line.

The Radar beam from the Radar scanner is approximately 20° wide in the vertical direction, to give good target detection even when your vessel pitches and rolls.

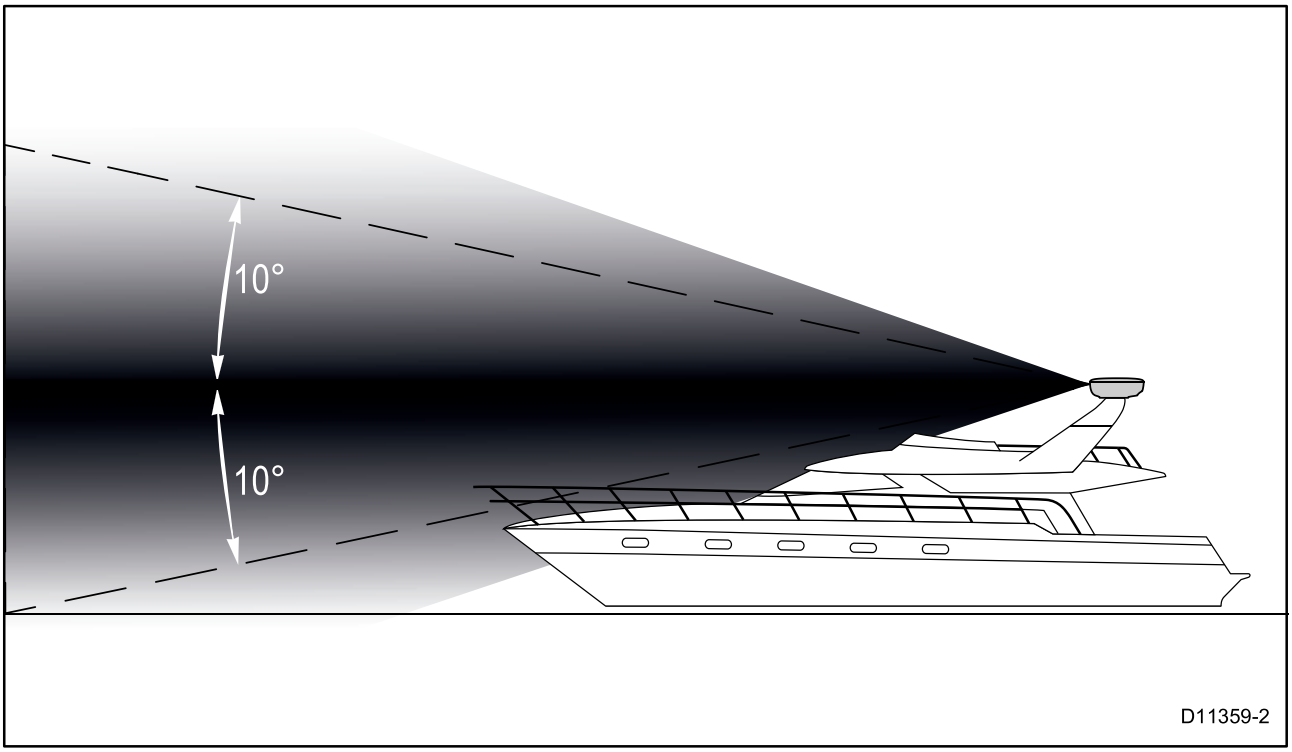

Planing hull vessels, and some displacement hull vessels, adopt a higher bow angle when the vessel is at cruising speed. This may raise the Radar's main radiation angle, and can cause poor detection of nearby targets. It may be necessary to compensate for the bow rise to ensure optimum target detection. This can be achieved by fitting a wedge or washers between the mounting platform and the base of the Radar scanner, so that the Radar beam remains parallel to the water line when the vessel's bow rises at cruising speed.

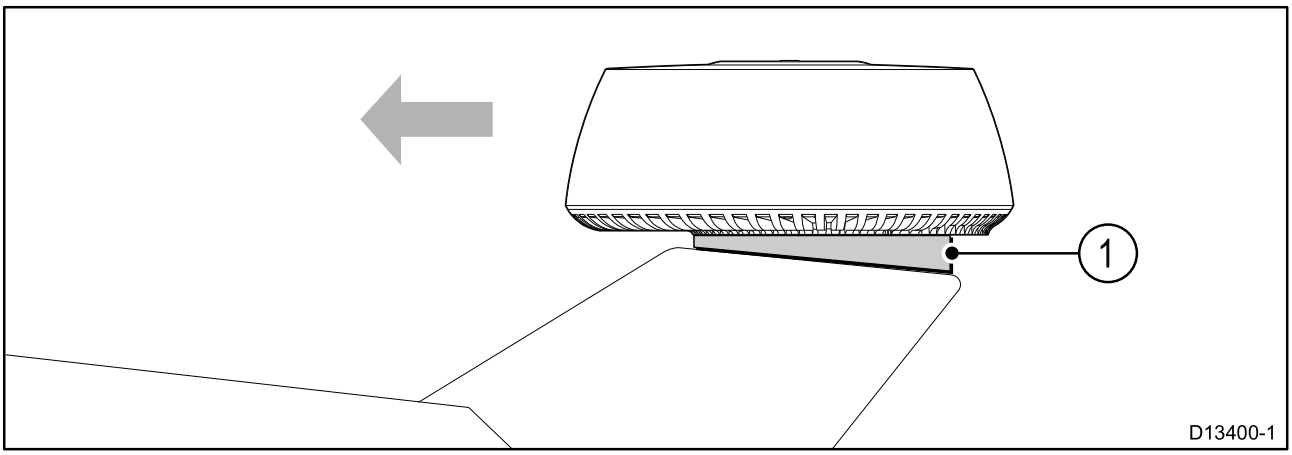

Item	Description
1	Wedge or washers

Multiple Radar scanners — location requirements

Important location considerations when installing multiple radar scanners on the same vessel.

- Scanners should be mounted above each other, vertically separated by at least 0.5 m (1.6 ft). This applies to all installation locations on the vessel.
- Multiple scanners should be mounted in a way that minimizes interference between the vertical beamwidths of the 2 scanners.
- In all cases, you should aim to achieve as much physical separation as possible, to minimize any potential interference.

3.9 Quantum Wi-Fi only installation requirements

Whilst the Wi-Fi performance has been tested and proven in many different installation scenarios, the requirements below must be taken into consideration before choosing a location for the Quantum™ Radar.

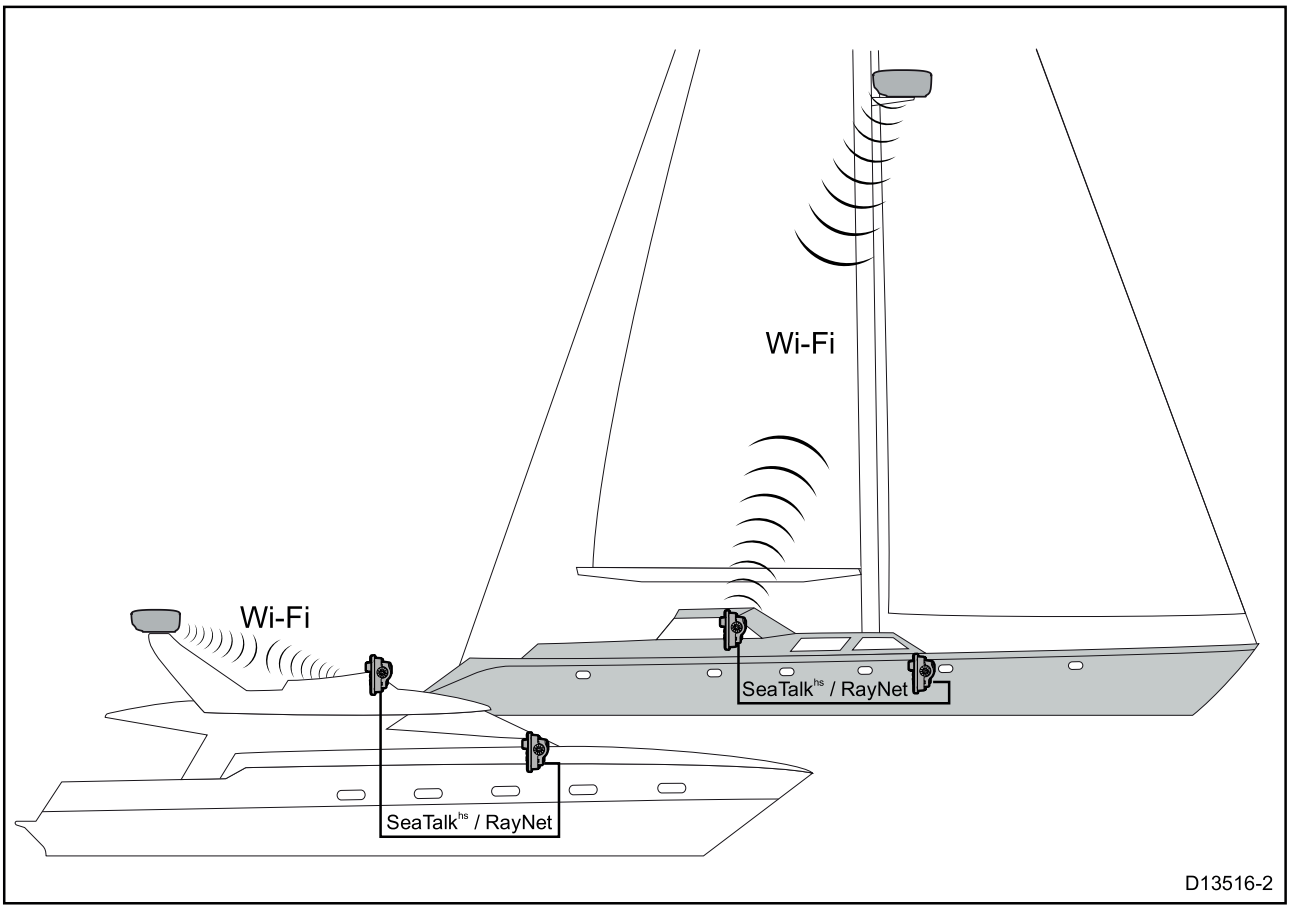

In systems with multiple MFDs, the Radar should be connected to the MFDs that are located closest to it, or to the MFDs with the clearest line of sight to the Radar.

The maximum distance between MFD and Radar will vary depending on the installation environment (i.e. obstructions and interference).

Example 1 — Open air, line-of-sight in optimum conditions

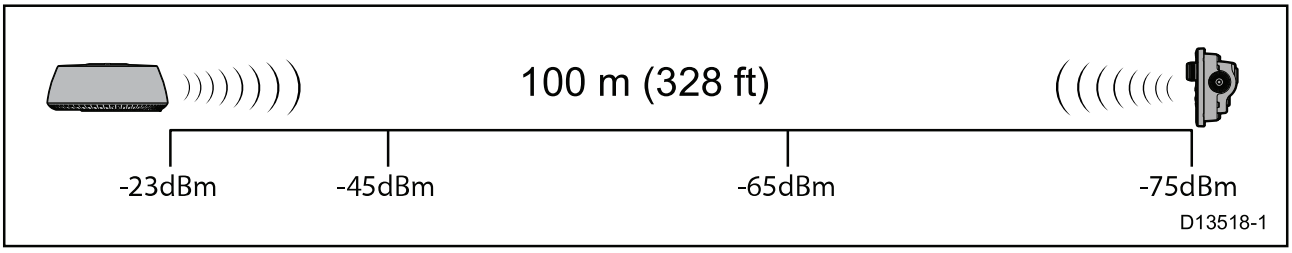

In optimum open air, clear line-of-sight conditions a reliable connection is possible at distances up to 100 m (328 ft). However, there are many factors that can influence this, so a pre-installation site survey should always be performed. For reliable Wi-Fi performance the signal strength should be better than –75dBm. The closer the signal is to zero the better the Wi-Fi performance will be (e.g. –40dBm is better than –75dBm). You can assess the potential signal strength at the desired location during the Pre-installation Site Survey using a Wi-Fi Analyzer app on your smart device.

Example 2 — Signal passing through Fiberglass coach roof

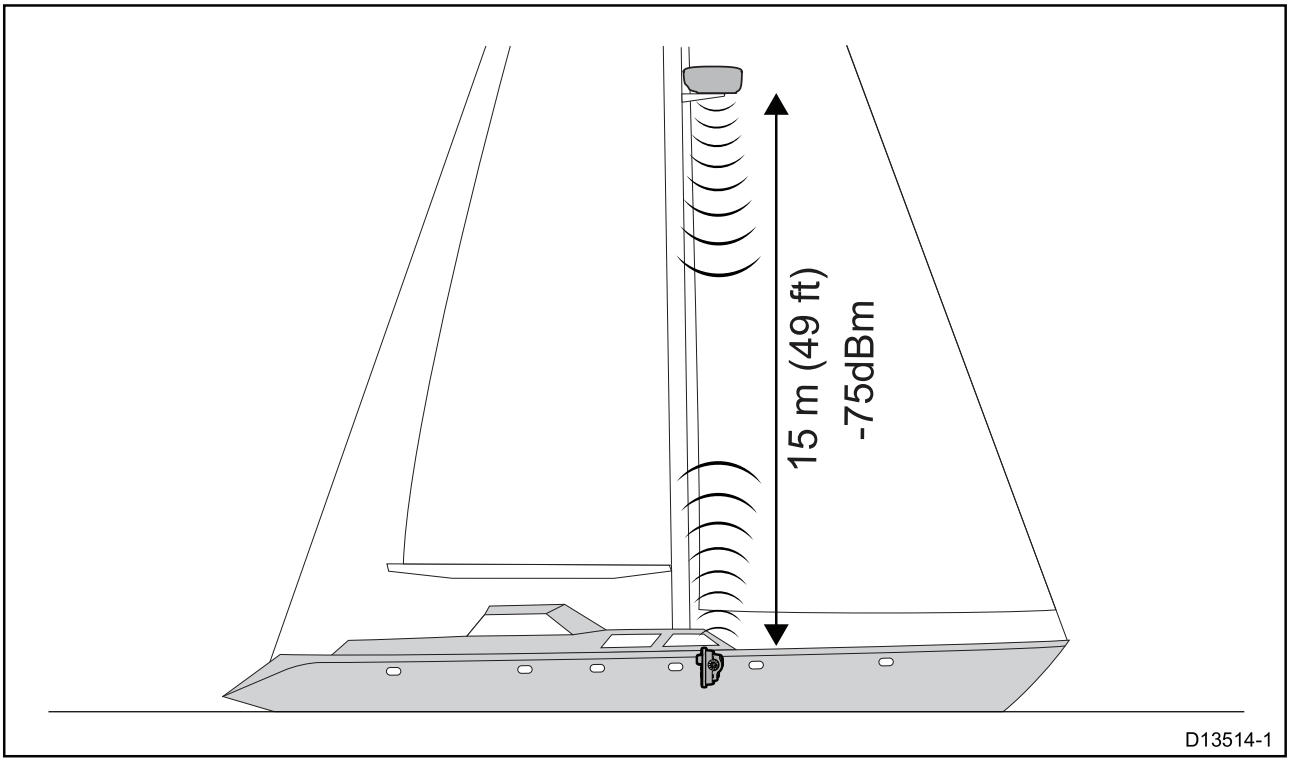

In the example above the maximum distance with acceptable Wi-Fi performance is 15 m (49 ft), due to the heavy fiberglass coach roof that the signal has to pass through.

Example 3 — Signal passing through heavy structure

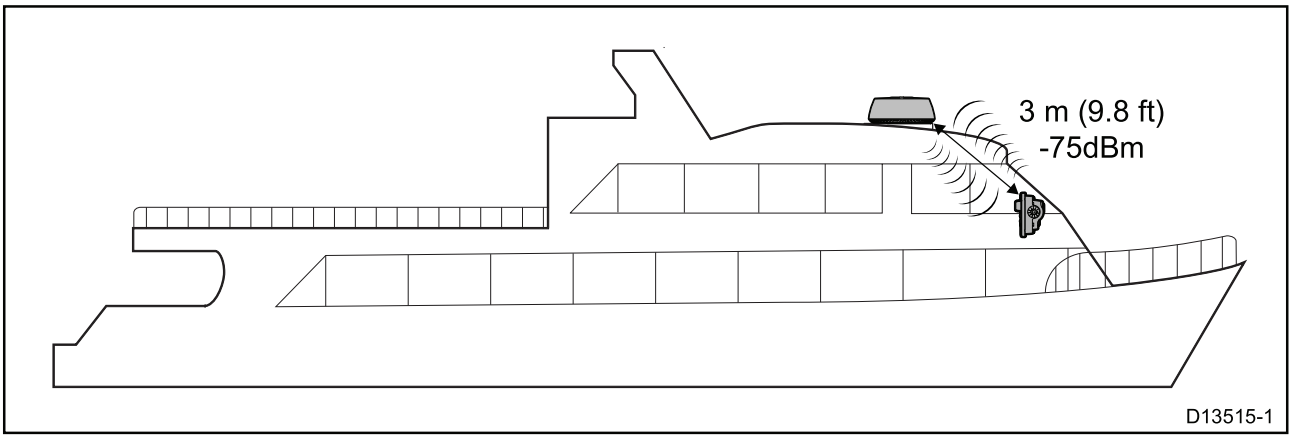

In the example above the maximum distance with acceptable Wi-Fi performance is 3 m (9.8 ft), due to the metal roof that the signal has to pass through.

Obstacles in the direct line of sight between the Radar and MFD will further impact Wi-Fi Performance. The impact of each obstacle is usually minimal, however the effect is cumulative. Obstacles can include but are not limited to:

- **Vessel structure** — Where the Wi-Fi signal passes through a vessel bulkhead or a coach roof, the Wi-Fi performance will be impacted. Depending on the material and thickness of the structure the impact may be severe; for example, a thick steel bulkhead may completely block the Wi-Fi signal.
- **Radar mounting** — The type of installation can impact performance; for example, mounting on a solid steel platform will have a greater impact on performance than mounting on a bar-style mount.
- **Electrical equipment and other objects** — Any object in the direct line-of-sight between the Radar and MFD can impact Wi-Fi performance. Electrical, electronic and electromagnetic devices will have a greater impact than furniture.
- **MFD installation** — MFD installation can also impact Wi-Fi performance; for example, if the MFD is surface mounted in a steel construction dash, the Wi-Fi performance will be impacted.

Wi-Fi Signal Reflection

When establishing a location for your Quantum Radar, that will be connected using a Wi-Fi connection, it is important to consider the effects your surroundings can have on the Wi-Fi signal. The Wi-Fi signal will reflect or 'bounce' off nearby objects which may create an easier path for the signal to take, whilst your connection may appear reliable it may quickly degrade when you take your vessel out into open water.

Example

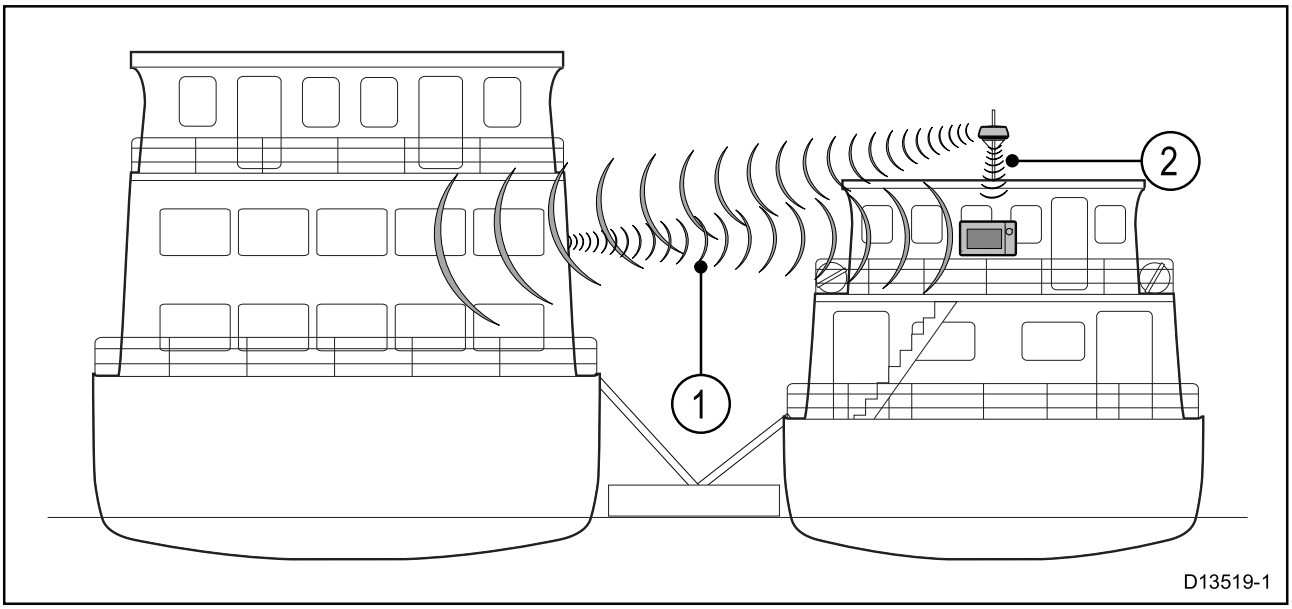

1. In this example the Wi-Fi signal is bounced off a nearby vessel and back through the windows on the bridge, this provides an easier path than passing through the metal roof.
2. In this example the Wi-Fi signal is reduced when passing through the metal roof. This, however may be the only path the signal can take when out in open water.

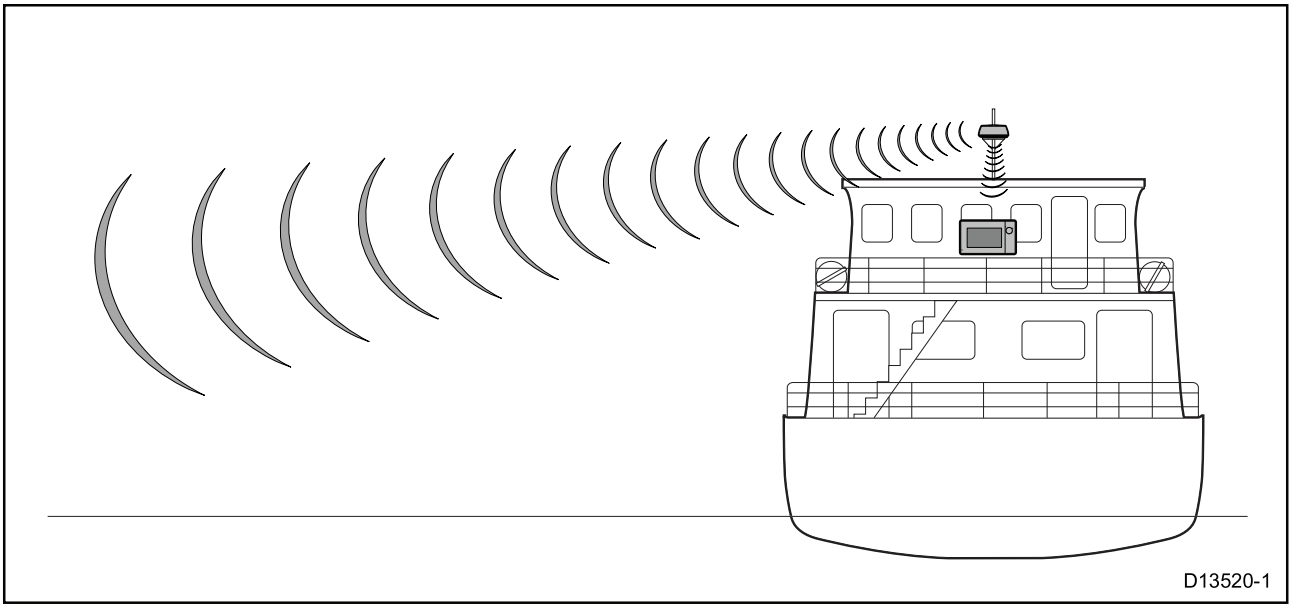

Warning: Quantum Wi-Fi connection

During installation there will usually be structure that affects the Wi-Fi signal. Before using the Radar for navigation, ensure you test the reliability of your Wi-Fi connection in open waters and away from any other vessels or structure.

Wireless location requirements

A number of factors can influence wireless performance, it is important to ensure you test the connection performance, at the desired location before installing wireless enabled products.

Distance

The distance between wireless products should always be kept to a minimum. Do not exceed the maximum stated range of your wireless product (Maximum range will vary for each device).

Wireless performance degrades over distance, so products farther away will receive less network bandwidth. Products installed close to their maximum wireless range may experience slow connection speeds, signal drop outs or not being able to connect at all.

Line of sight

For best results the wireless product should have a clear, direct line of sight to the product it will be connected to. Any physical obstructions can degrade or even block the wireless signal.

The construction of your vessel can also have an impact on wireless performance. For example, metal structural bulkheads and roofing will reduce and in certain situations, block the wireless signal.

If the wireless signal passes through a bulkhead containing power cables this can also degrade wireless performance.

Reflective surfaces such as metal surfaces, some types of glass and even mirrors can drastically effect performance or even block the wireless signal.

Interference and other equipment

Wireless products should be installed at least 1m (3 ft) away from:

- Other wireless enabled products.
- Transmitting products that send wireless signals in the same frequency range.
- Other electrical, electronic or electromagnetic equipment that may generate interference.

Interference from other peoples wireless devices can also cause interference with your products. You can use a third party wireless analyzer tool / smartphone app to assess the best wireless channel (channel not in use or used by least amount of devices) for you to use.

Pre-installation site survey — Wi-Fi Analyzer

Before installing a Quantum Radar, that will be connected using Wi-Fi, a site survey should be performed to ensure the Wi-Fi Signal strength is sufficient to maintain a reliable connection.

It is recommended that you perform the site survey using a smart device and a Wi-Fi Analyzer app (e.g. Wi-Fi Analyzer by Farproc for android devices).

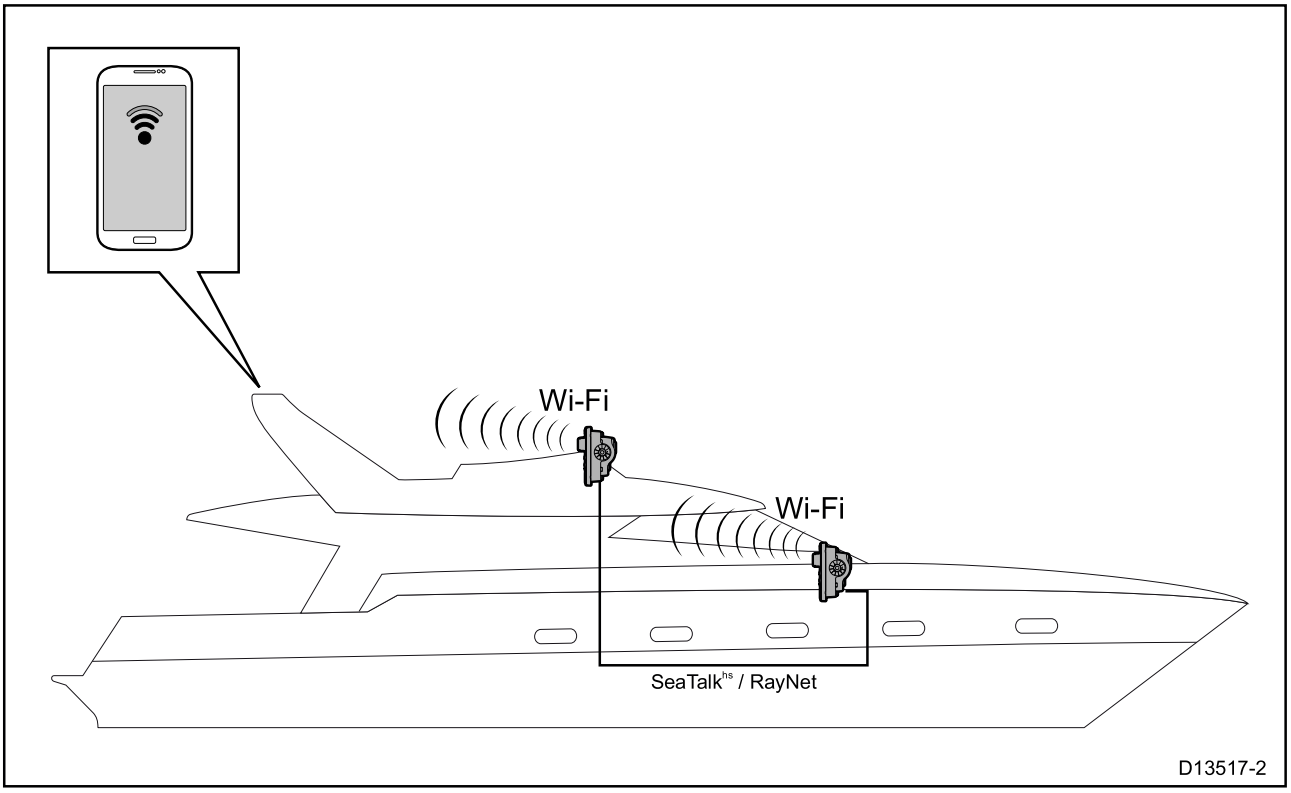

1. Install the Wi-Fi Analyzer app on your smart device.
2. Enable your MFDs Wi-Fi connection: (**Homescreen** > **Set-up** > **Wireless connection** > **Wi-Fi** > **Wi-Fi: On**)
3. Make a note of the MFDs Wi-Fi Name (**Homescreen** > **Set-up** > **Wireless connection** > **Wi-Fi** > **Wi-Fi Sharing** > **Wi-Fi Name**).
4. Go to the location you have chosen for your Radar.
5. Open the Wi-Fi Analyzer app on your smart device and scan available networks.
6. Establish the signal strength of your MFDs Wi-Fi network at the intended install location.

   For reliable Wi-Fi performance the signal strength should be better than –75dBm, the closer the signal is to zero the better the Wi-Fi performance will be (e.g. –40dBm is better than –75dBm).

7. If you have a weak or intermittent signal then you will need to investigate further, please refer to the Wi-Fi location requirements guide to help establish what may be causing the problem.
8. For networks with multiple MFDs, repeat steps 2 to 7 for each MFD in your network.

Pre-installation site survey — Raymarine app

You can also use Raymarine apps such as **RayControl** or **RayView** to assess the reliability of the Wi-Fi connection at the desired installation location.

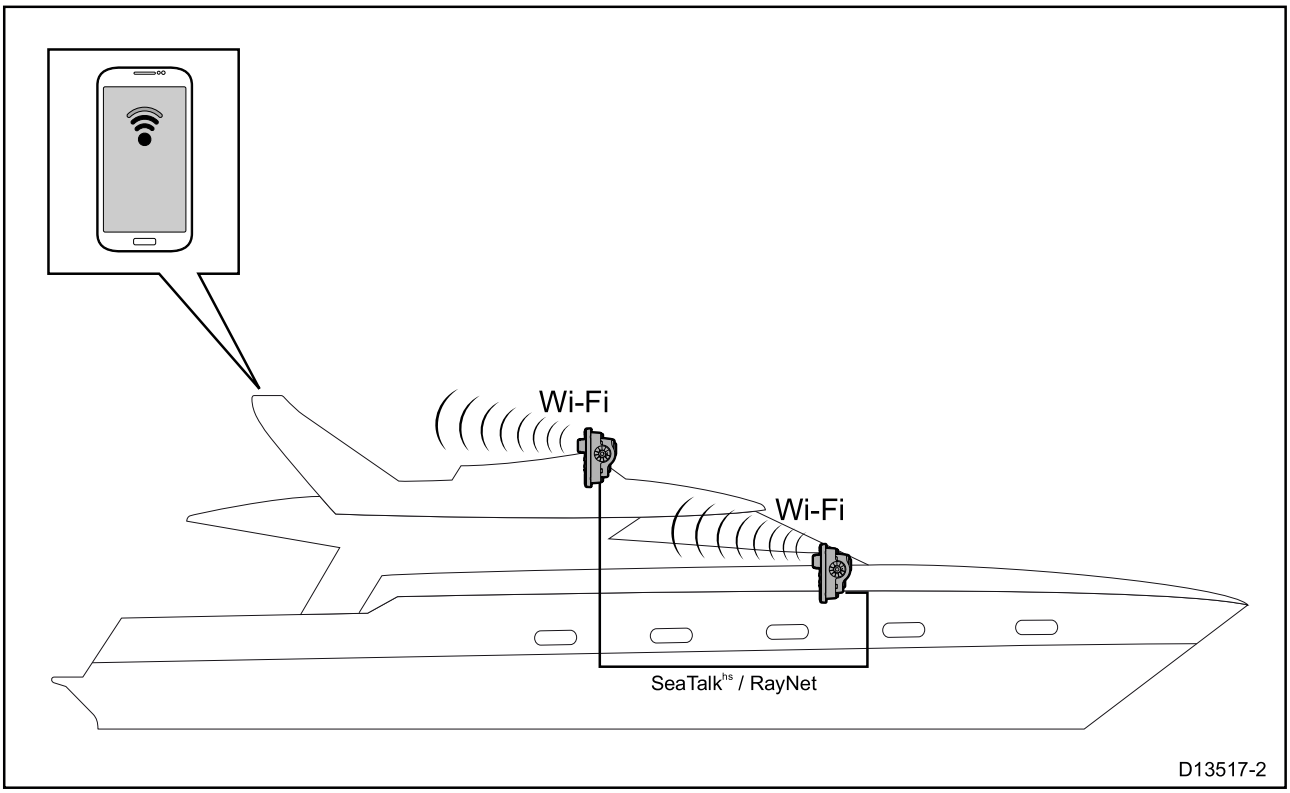

1. Enable your MFDs Wi-Fi connection: (**Homescreen** > **Set-up** > **Wireless connection** > **Wi-Fi** > **Wi-Fi: On**)
2. Enable 'Viewing only' or 'Remote control' from the Mobile apps menu: (**Homescreen** > **Set-up** > **Wireless connection** > **Wi-Fi** > **Wi-Fi Sharing** > **Mobile apps**).
3. Make a note of the MFDs Wi-Fi Name (**Homescreen** > **Set-up** > **Wireless connection** > **Wi-Fi** > **Wi-Fi Sharing** > **Wi-Fi Name**).
4. Go to the location you have chosen for your Radar.
5. Using your smart device, search for available Wi-Fi networks.
6. Find your MFDs network and check the signal strength reported by your device.
7. If you have a strong signal strength, open a Raymarine mobile app such as **RayView** or **RayControl** and check functionality at the desired location. If you do not experience any performance issues running the app then you can proceed with the installation.
8. If you have a weak or intermittent signal then you will need to investigate further, please refer to the Wi-Fi location requirements guide to help establish what may be causing the problem.
9. For networks with multiple MFDs, repeat steps 1 to 9 for each MFD in your network.

Wi-Fi signal strength

Wi-Fi signal strength is measured in decibel-milliwatts (dBm). The signal strength of the network you are currently connected to is usually represented graphically by a Wi-Fi symbol.

The signal strength range represented by each filled bar is determined independently by each device manufacturer. However, in general the performance will be similar.

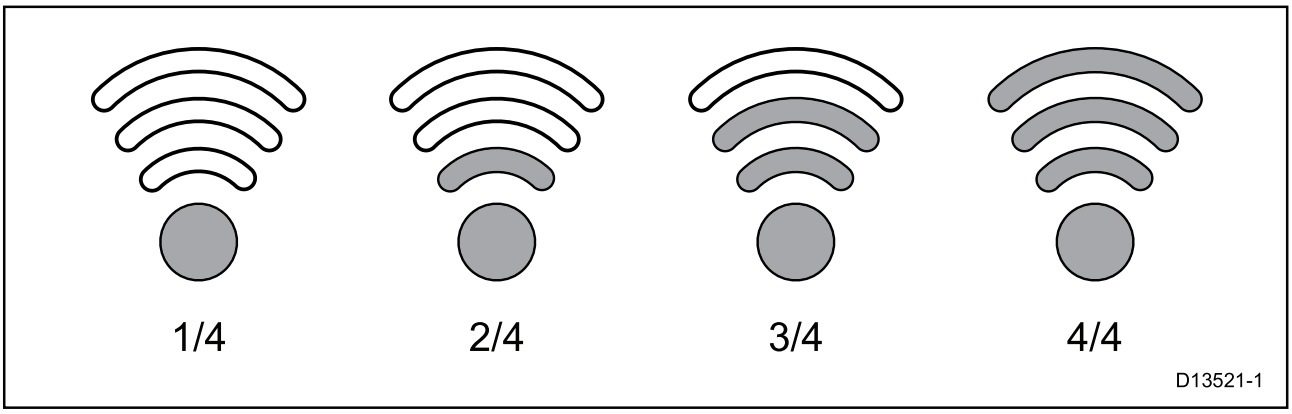

- **1/4** — Unable to maintain a connection, usually accompanied by very poor connection speed (**LightHouse**™ MFD: –150dBm or worse).
- **2/4** — Intermittent disconnects and reconnects, usually accompanied by a slow connection speed (**LightHouse**™ MFD: –80dBm to –149dBm).
- **3/4** — Reliable connection with good connection speed (**LightHouse**™ MFD: –70dBm to –79dBm).
- **4/4** — Reliable connection, excellent connection speed (**LightHouse**™ MFD: –55dBm or better).

Chapter 4: Cables and connections (Quantum variant with RayNet)

Chapter contents

- 4.1 Wi-Fi only Quantum variants on page 42
- 4.2 General cabling guidance on page 43
- 4.3 Connections overview on page 45
- 4.4 Power connection on page 52
- 4.5 Network connection on page 56

4.1 Wi-Fi only Quantum variants

Important: This section does NOT apply to Wi-Fi-only Quantum variants. For information applicable to your product variant, please refer to the Chapter 5 **Cables and connections (Quantum variant with Wi-Fi only)**
section.

4.2 General cabling guidance

Cable types and length

It is important to use cables of the appropriate type and length

- Unless otherwise stated use only standard cables of the correct type, supplied by Raymarine.
- Ensure that any non-Raymarine cables are of the correct quality and gauge. For example, longer power cable runs may require larger wire gauges to minimize voltage drop along the run.

Routing cables

Cables must be routed correctly, to maximize performance and prolong cable life.

- Do NOT bend cables excessively. Wherever possible, ensure a minimum bend diameter of 200 mm (8 in) / minimum bend radius of 100 mm (4 in).

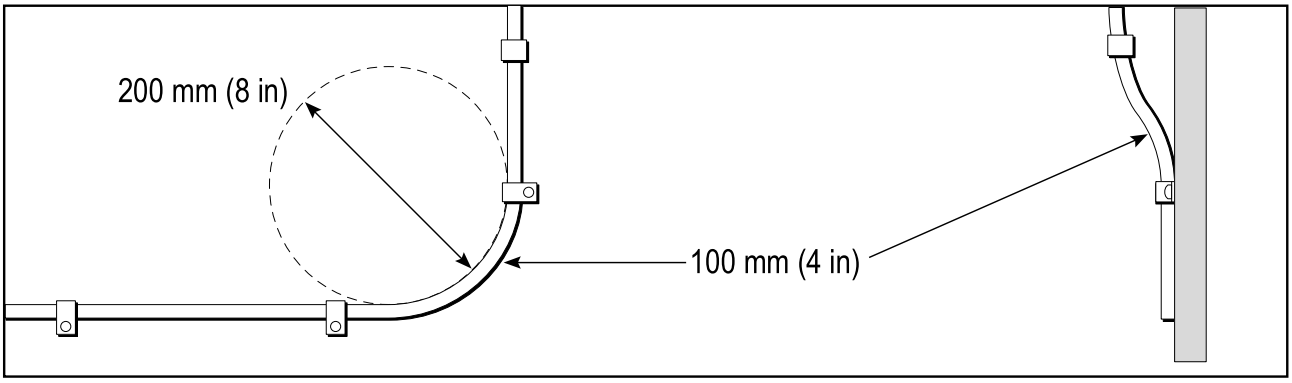

- Protect all cables from physical damage and exposure to heat. Use trunking or conduit where possible. Do NOT run cables through bilges or doorways, or close to moving or hot objects.
- Secure cables in place using tie-wraps or lacing twine. Coil any extra cable and tie it out of the way.
- Where a cable passes through an exposed bulkhead or deckhead, use a suitable watertight feed-through.
- Do NOT run cables near to engines or fluorescent lights.

Always route data cables as far away as possible from:

- other equipment and cables,
- high current carrying AC and DC power lines,
- antennas.

Strain relief

Ensure adequate strain relief is provided. Protect connectors from strain and ensure they will not pull out under extreme sea conditions.

Circuit isolation

Appropriate circuit isolation is required for installations using both AC and DC current:

- Always use isolating transformers or a separate power-inverter to run PC's, processors, displays and other sensitive electronic instruments or devices.
- Always use an isolating transformer with Weather FAX audio cables.
- Always use an isolated power supply when using a 3rd party audio amplifier.
- Always use an RS232/NMEA converter with optical isolation on the signal lines.
- Always make sure that PC's or other sensitive electronic devices have a dedicated power circuit.

Cable shielding

Ensure that all cables are properly shielded and that the cable shielding is undamaged.

Suppression ferrites

- Raymarine cables may be pre-fitted or supplied with suppression ferrites. These are important for correct EMC performance. If ferrites are supplied separately to the cables (i.e. not pre-fitted), you must fit the supplied ferrites, using the supplied instructions.
- If a ferrite has to be removed for any purpose (e.g. installation or maintenance), it must be replaced in the original position before the product is used.
- Use only ferrites of the correct type, supplied by Raymarine or its authorized dealers.
- Where an installation requires multiple ferrites to be added to a cable, additional cable clips should be used to prevent stress on the connectors due to the extra weight of the cable.

4.3 Connections overview

Use the following information to help you identify the connections on your product.

Connector	Connects to:	Suitable cables
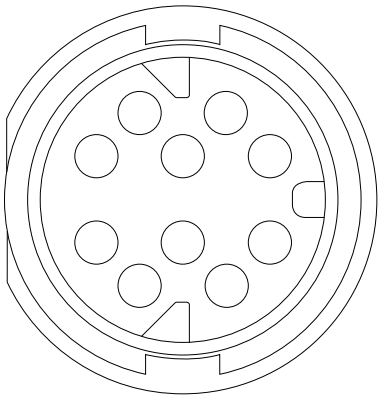	RayNet network or device. Not required if connecting using Wi-Fi.	Refer to the Chapter 11 **Spares and accessories** section.
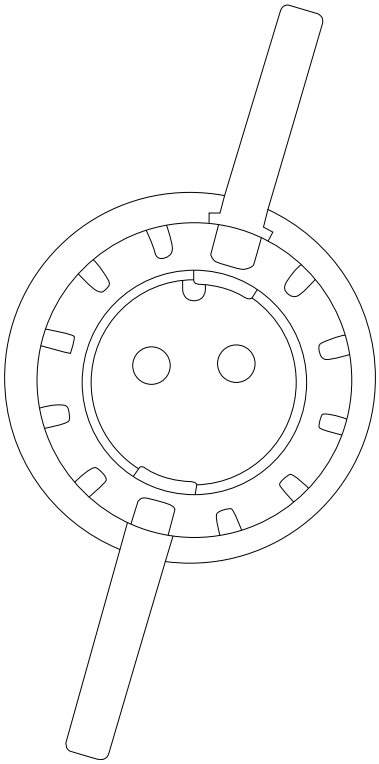	12 V / 24 V power supply.	Supplied with your product.

The power and data connections are located on the underside of the scanner unit, as shown in the following illustration.

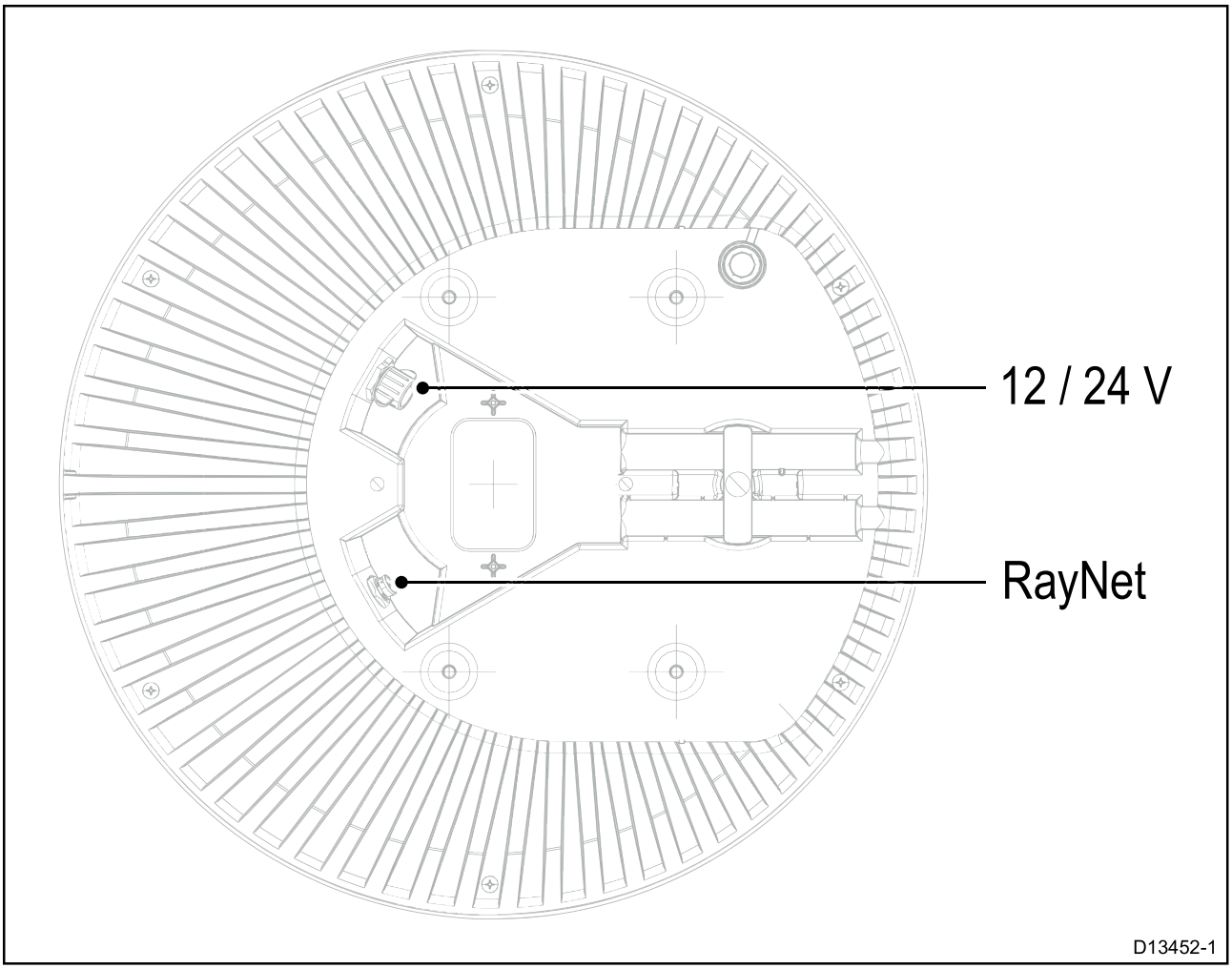

Typical cable routing scenarios

There are 4 typical cable routing scenarios.

Note: The routing options described and illustrated in this section assume that a physical data connection is used between your Radar scanner and multifunction display (MFD). However, if the scanner is connected to your MFD via Wi-Fi, a physical RayNet connection is not required.

1. Cable routing for a scanner mounted on a platform, using separate cables for the power and data connection.
2. Cable routing for a scanner mounted on a platform, using the combined power and data cable from an existing Raymarine Digital Radar scanner installation. For this, the **A80308** Y-adapter accessory is required (not supplied with the scanner).
3. Cable routing for a scanner mounted on a pole, using separate cables for the power and data connection.
4. Cable routing for a scanner mounted on a pole, using the combined power and data cable from an existing Raymarine Digital Radar scanner installation. For this, the **A80308** Y-adapter accessory is required (not supplied with the scanner).

Cable routing — platform mount

There are 2 typical cable routing scenarios for platform mount installations.

- Using separate power and data cables.
- Using an existing combined power / data cable from an older Raymarine Digital radar scanner. In this scenario, the **A80308** Y-adapter accessory is required (not supplied with the scanner).

Using separate power and data cables

Note: The routing options described and illustrated in this section assume that a physical data connection is used between your Radar scanner and multifunction display (MFD). However, if the scanner is connected to your MFD via Wi-Fi, a physical RayNet connection is not required.

The following drawing illustrates the cable routing for a scanner mounted on a platform, using separate cables for the power and data connections.

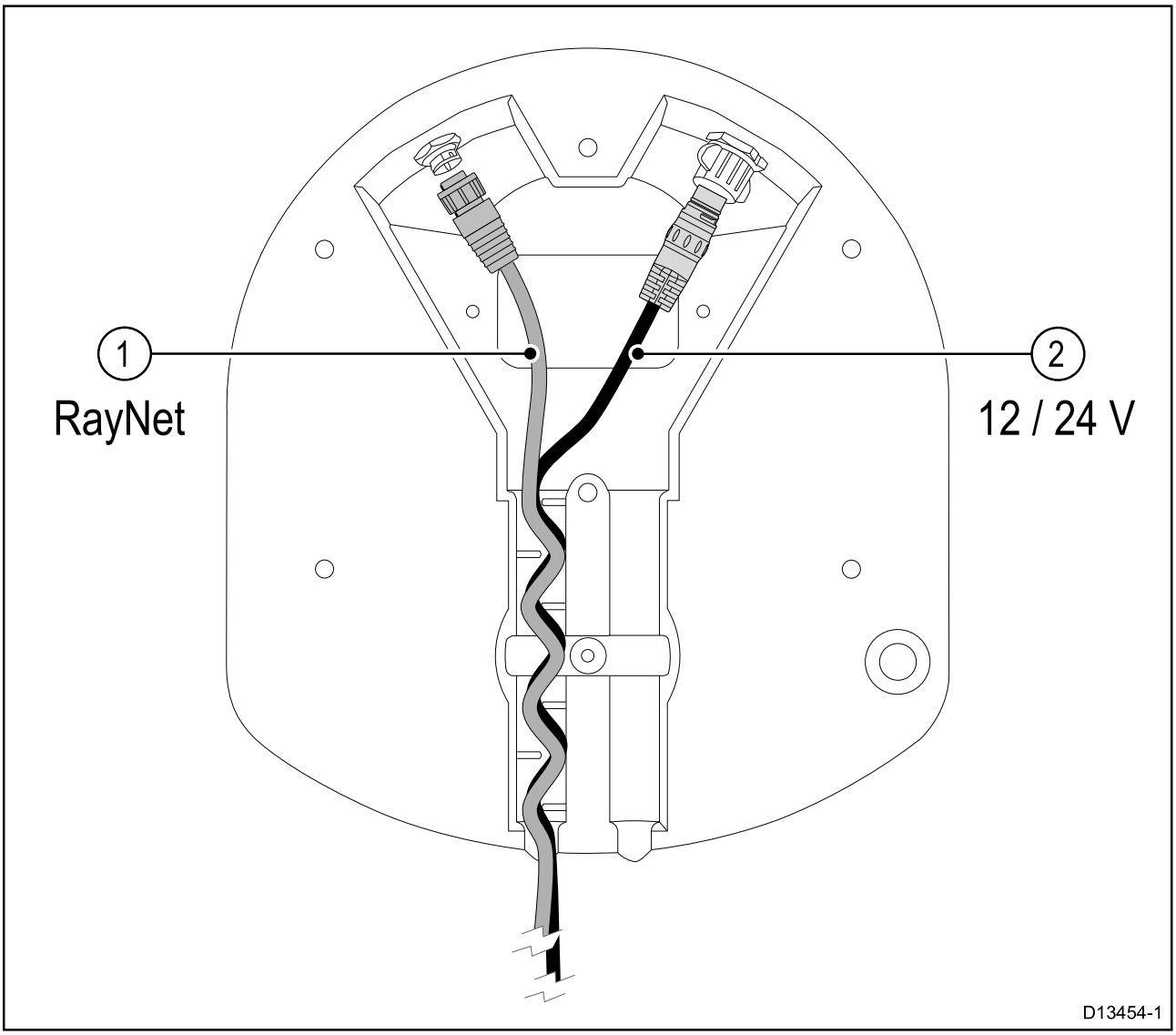

1. RayNet data connection.
2. 12 V / 24 V power connection.

Note:

- A separate power cable is supplied with all Quantum™ Radar variants.
- Not all Quantum™ radar variants are supplied with a RayNet cable. Refer to the Chapter 2 **Document and product information** section for more information.
- Refer to the 11.4 **RayNet to RayNet cables and connectors** section for information on suitable accessory RayNet cables.

Using an existing combined power / data cable from an older Raymarine Digital Radar

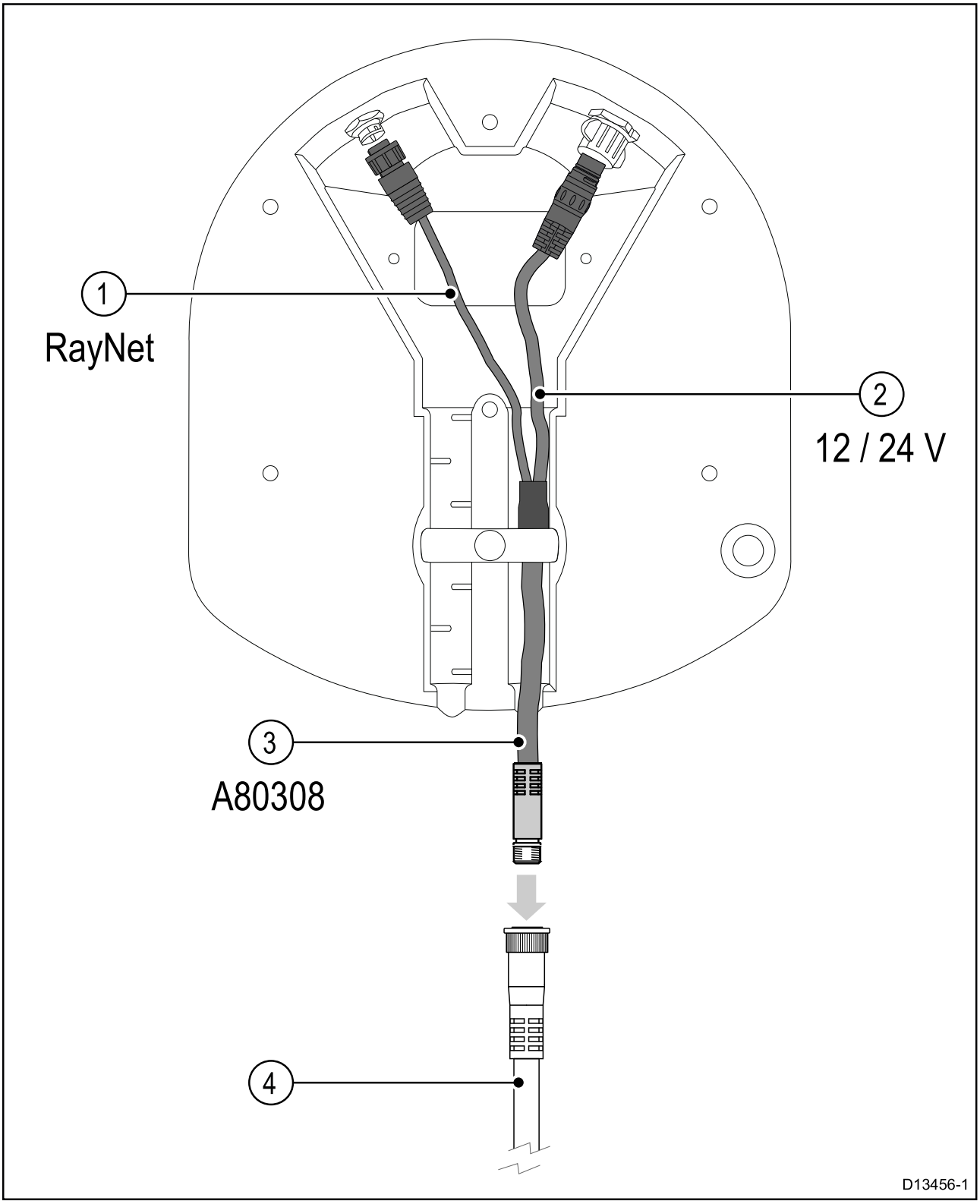

Note: The Y-adapter cable is actually white. For clarity, it is shown in the above drawing in different colors.

1. RayNet data connection. This cable is part of the **A80308** Y-adapter accessory cable.
2. 12 V / 24 V power connection. This cable is part of the **A80308** Y-adapter accessory cable.
3. **A80308** Y-adapter accessory cable (not supplied with the scanner).
4. Existing combined Digital Radar power / data cable.

Cable routing — pole mount

There are 2 typical cable routing scenarios for pole mount installations.

- Using separate power and data cables.
- Using an existing combined power / data cable from an older Raymarine Digital Radar scanner. In this scenario, the **A80308** Y-adapter accessory is required (not supplied with the scanner).

Using separate power and data cables

Note: The routing options described and illustrated in this section assume that a physical data connection is used between your Radar scanner and multifunction display (MFD). However, if the scanner is connected to your MFD via Wi-Fi, a physical RayNet connection is not required.

The following drawing illustrates the cable routing for a scanner mounted on a platform, using separate cables for the power and data connection.

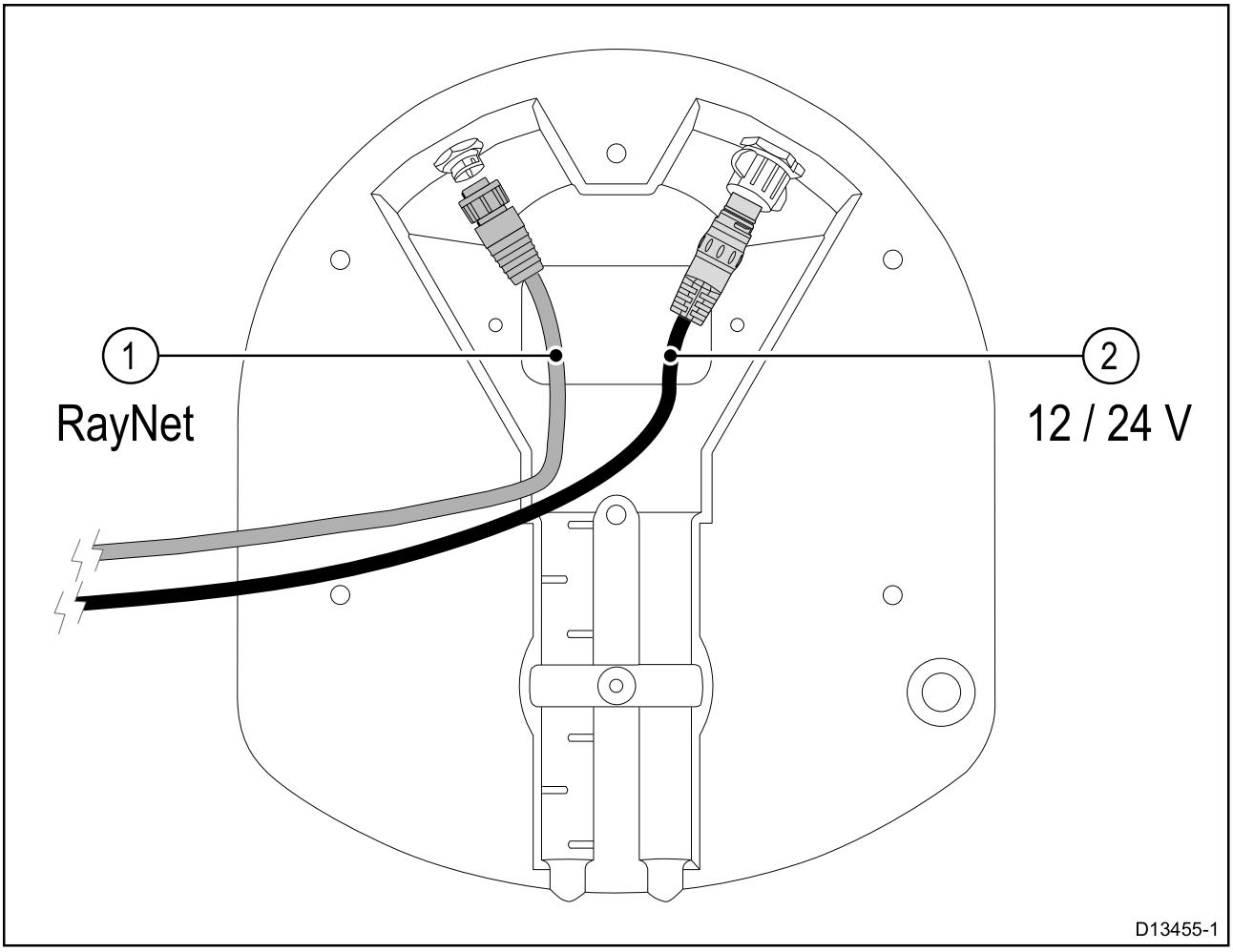

1. RayNet data connection.
2. 12 V / 24 V power connection.

Note:

- A separate power cable is supplied with all Quantum™ Radar variants.
- Not all Quantum™ radar variants are supplied with a RayNet cable. Refer to the Chapter 2 **Document and product information** section for more information.
- Refer to the 11.4 **RayNet to RayNet cables and connectors** section for information on suitable accessory RayNet cables.

Using an existing combined power / data cable from an older Raymarine Digital Radar

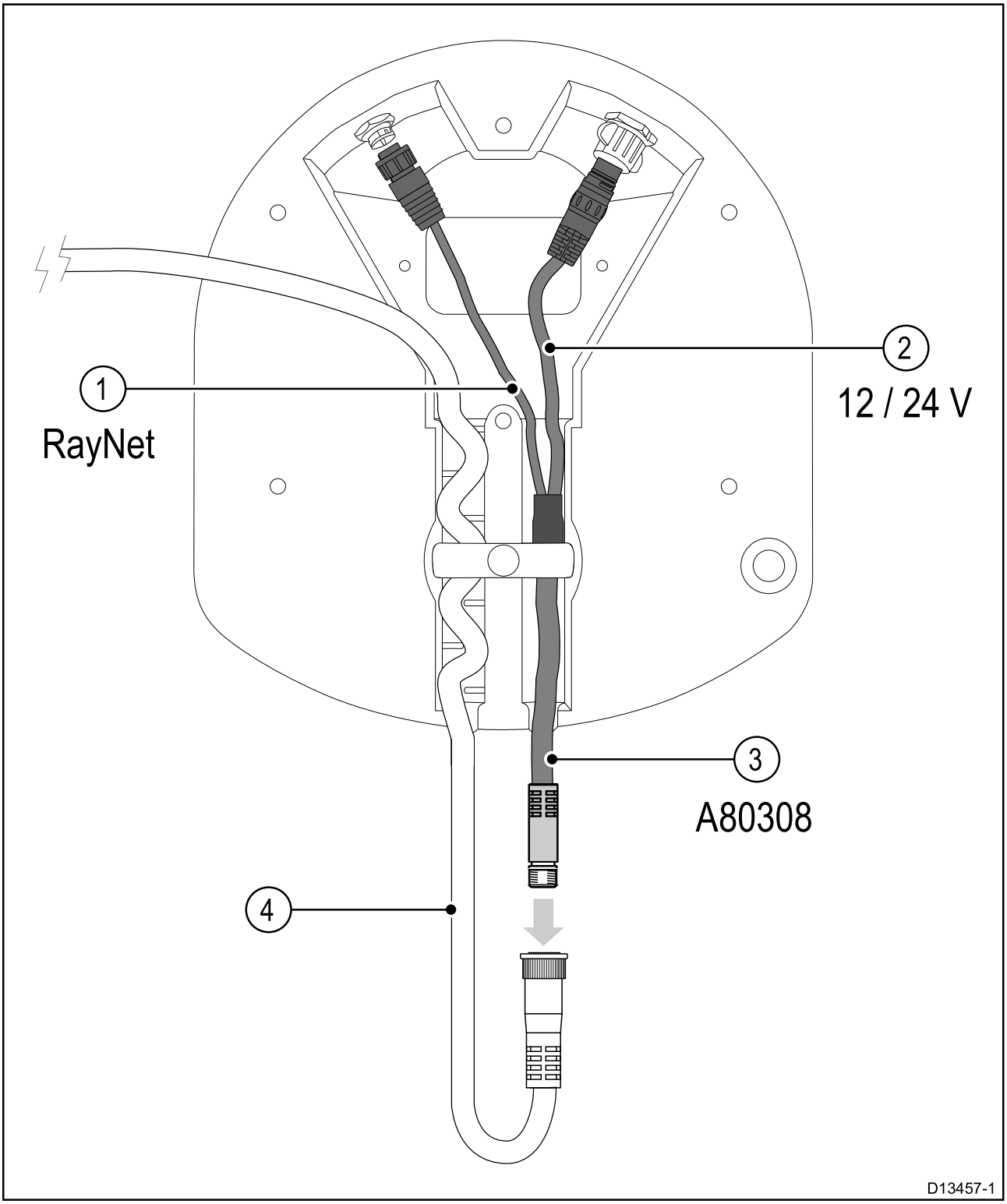

Note: The Y-adapter cable is actually white. For clarity, it is shown in the above drawing in different colors.

1. RayNet data connection. This cable is part of the **A80308** Y-adapter accessory cable.
2. 12 V / 24 V power connection. This cable is part of the **A80308** Y-adapter accessory cable.
3. **A80308** Y-adapter accessory cable (not supplied with the scanner).
4. Existing combined Digital Radar power / data cable.

Making connections

Follow the steps below to connect the cable(s) to your product. If you intend to use the scanner's Wi-Fi functionality to connect to your multifunction display, you need only connect a power cable to the scanner.

Note: If your vessel is already fitted with a combined power / data Digital Radar cable, you can use a Y-adapter (part number A80308) to connect the existing cable-end to the scanner's connectors.

1. Ensure that the vessel's power supply is switched off.
2. Ensure that the multifunction display being connected to the scanner has been installed in accordance with the installation instructions supplied with that device.
3. Ensure the power connector locking collar on the scanner is in the unlocked position.
4. Route the power cable and optional data cable within the scanner base, as shown in the cable routing illustrations in this section. Cable routing depends on whether you mount the scanner on a platform or on a pole, and on whether you are using a Y-adapter to connect to an existing combined power / data Digital Radar cable.
5. Ensure that the power cable connector is orientated so that the notch lines up with the guide in the connector.
6. Push the power cable connector all the way into the scanner's power connector.
7. Rotate the locking collar clockwise until it is in the locked position (2 clicks).
8. Push the optional data cable fully onto the corresponding connector on the scanner.
9. If you are using a Y-adapter, make the final connection between the adapter and the existing combined power / data Digital Radar cable.

4.4 Power connection

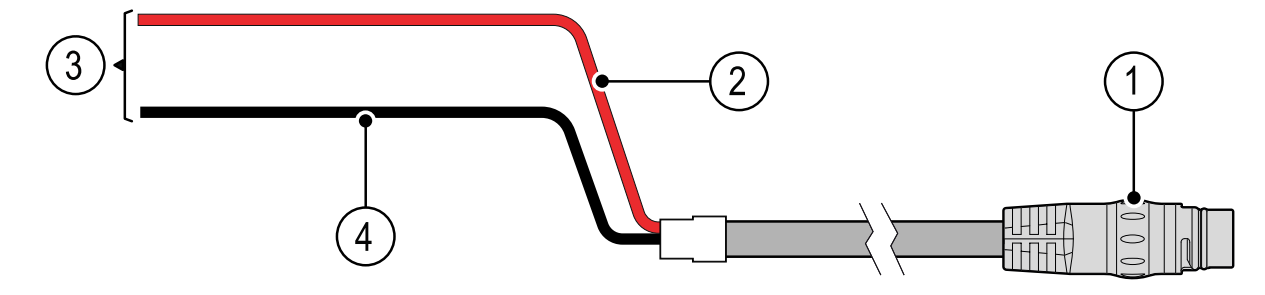

Note: A Y-adapter cable (part number A80308) is available for existing installations that already use a combined power/data cable from a Digital or HD Color Radome. The Y-adapter splits the existing combined cable into the separate data and power connectors used by the scanner.

Item	Description	Connects to:
1	Power cable.	Product's power connector.
2	Red cable (positive)	Power supply's positive terminal.
3	Connection to 12 V / 24 V power supply.	Power supply.
4	Black cable (negative)	Power supply's negative terminal.

In-line fuse and thermal breaker ratings

The following in-line fuse and thermal breaker ratings apply to your product:

In-line fuse rating	Thermal breaker rating
5 A	3 A

Note:

- The suitable fuse rating for the thermal breaker is dependent on the number of devices you are connecting. If in doubt consult an authorized Raymarine dealer.
- Your product's power cable may have an in-line fuse fitted, if not then you must add an in-line fuse / breaker to the positive wire of your product's power connection.

Warning: Grounding not required

This product is fully insulated and does NOT require separate grounding.

Power cable extension

The product is supplied with a power cable, which can be extended if required.

- The power cable for each unit in your system should be run as a separate, single length of 2-wire cable from the unit to the vessel's battery or distribution panel.
- Raymarine recommends a **minimum** wire gauge of 14AWG (2.08 mm^2) for any length of cable extension.
- For all lengths of extension to the power cable, ensure there is a continuous **minimum** voltage at the product's power connector of 10.8 V with a fully flat battery at 11 V.

Important: Be aware that some products in your system (such as sonar modules) can create voltage peaks at certain times, which may impact the voltage available to other products during the peaks.

Power distribution

Recommendations and best practice.

- The product is supplied with a power cable, either as a separate item or a captive cable permanently attached to the product. Only use the power cable supplied with the product. Do NOT use a power cable designed for, or supplied with, a different product.

- Refer to the *Power connection* section for more information on how to identify the wires in your product's power cable, and where to connect them.
- See below for more information on implementation for some common power distribution scenarios.

Important:

When planning and wiring, take into consideration other products in your system, some of which (e.g. sonar modules) may place large power demand peaks on the vessel's electrical system, which may impact the voltage available to other products during the peaks.

Note:

The information provided below is for guidance only, to help protect your product. It covers common vessel power arrangements, but does NOT cover every scenario. If you are unsure how to provide the correct level of protection, please consult an authorized Raymarine dealer or a suitably qualified professional marine electrician.

Implementation — direct connection to battery

- The power cable supplied with your product may be connected directly to the vessel's battery, via a suitably rated fuse or breaker.
- The power cable supplied with your product may NOT include a separate drain wire. If this is the case, only the power cable's red and black wires need to be connected.
- If the supplied power cable is NOT fitted with an inline fuse, you MUST fit a suitably rated fuse or breaker between the red wire and the battery's positive terminal.
- Refer to the inline fuse ratings provided in the product's documentation.
- If you need to extend the length of the power cable supplied with your product, ensure you observe the dedicated *Power cable extensions* advice provided in the product's documentation.

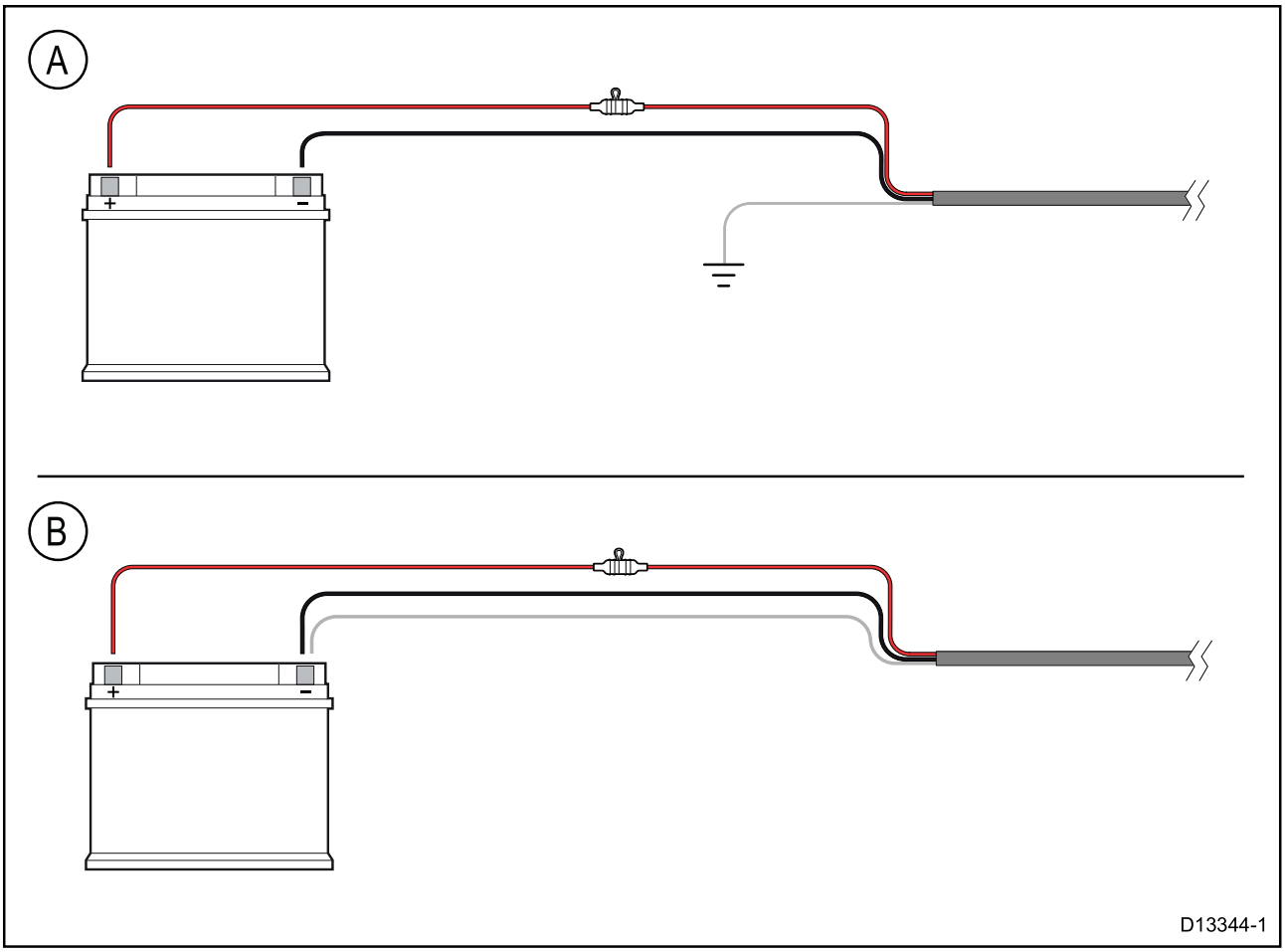

A	Battery connection scenario A: suitable for a vessel with a common RF ground point. In this scenario, if your product's power cable is supplied with a separate drain wire then it should be connected to the vessel's common ground point.
B	Battery connection scenario B: suitable for a vessel without a common grounding point. In this case, if your product's power cable is supplied with a separate drain wire then it should be connected directly to the battery's negative terminal.

Implementation — connection to distribution panel

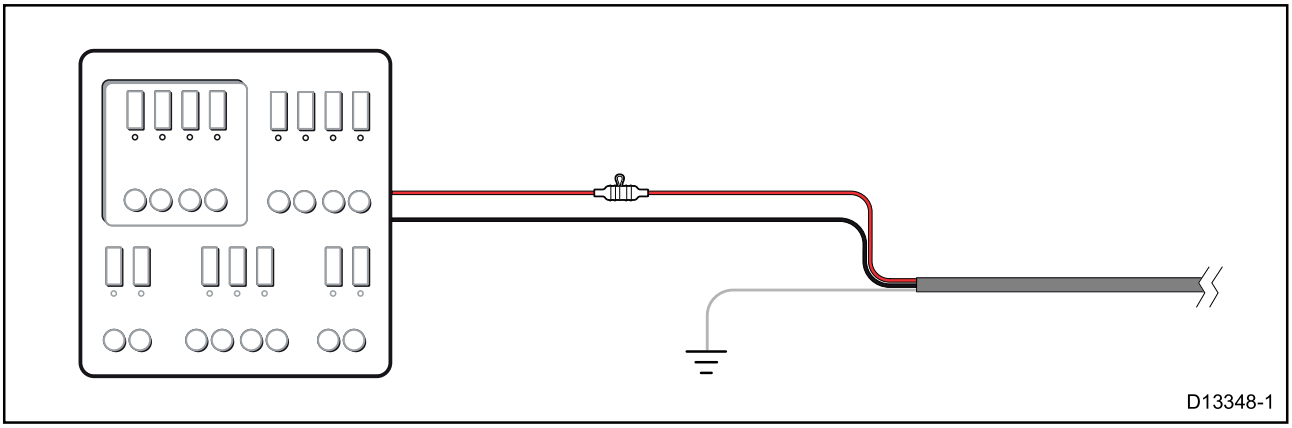

- Alternatively, the supplied power cable may be connected to a suitable breaker or switch on the vessel's distribution panel or factory-fitted power distribution point.
- The distribution point should be fed from the vessel's primary power source by 8 AWG (8.36 mm^2) cable.
- Ideally, all equipment should be wired to individual suitably-rated thermal breakers or fuses, with appropriate circuit protection. Where this is not possible and more than 1 item of equipment shares a breaker, use individual in-line fuses for each power circuit to provide the necessary protection.

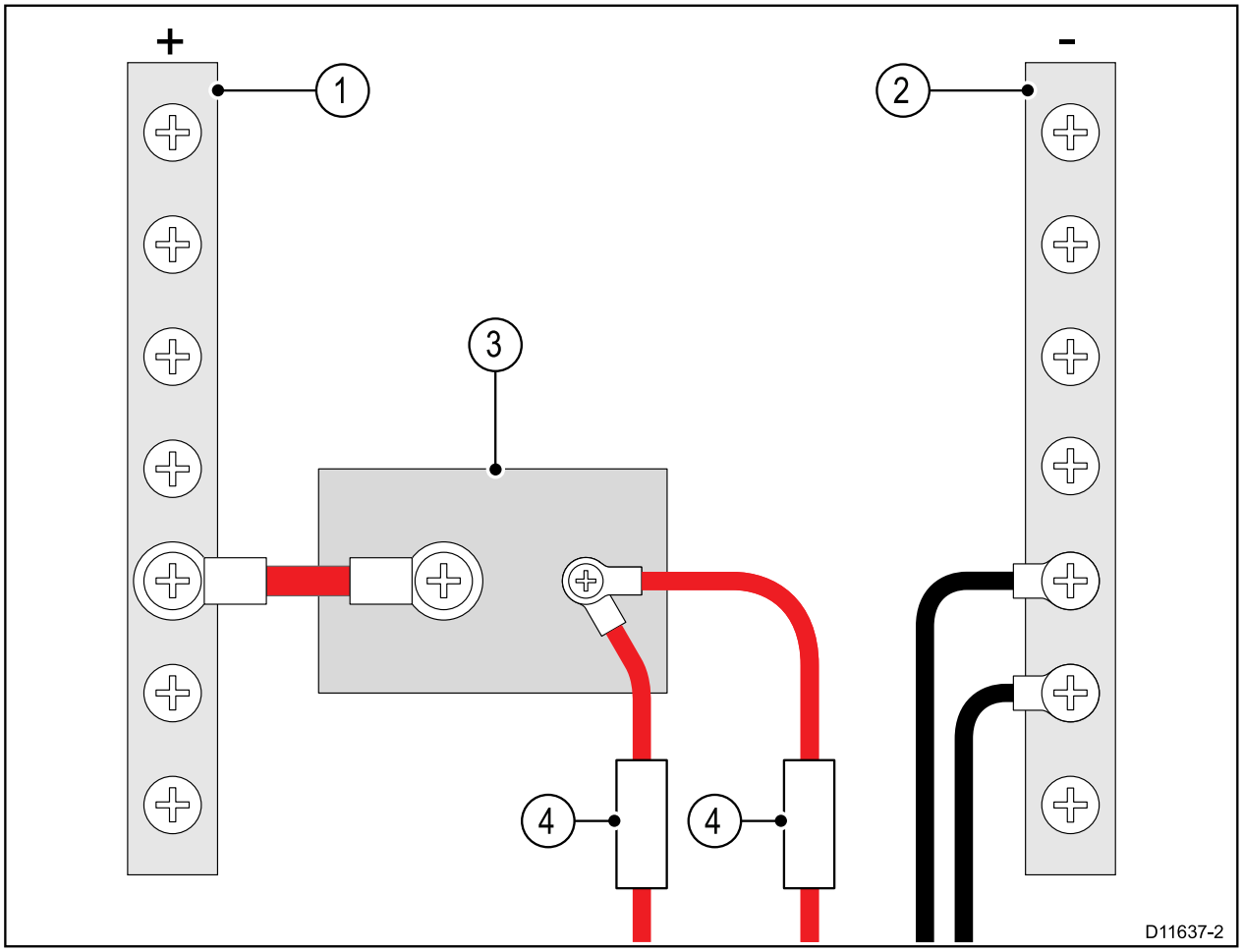

1	Positive (+) bar
2	Negative (-) bar
3	Circuit breaker
4	Fuse

- In all cases, observe the recommended breaker / fuse ratings provided in the product's documentation.

Important:

Be aware that the suitable fuse rating for the thermal breaker or fuse is dependent on the number of devices you are connecting.

Power cable extension

If you need to extend the length of the power cable supplied with your product, ensure you observe the following advice:

- The power cable for each unit in your system should be run as a separate, single length of 2-wire cable from the unit to the vessel's battery or distribution panel.
- For power cable extensions, a **minimum** wire gauge of 16 AWG (1.31 mm^2) is recommended. For cable runs longer than 15 meters, you may need to consider a thicker wire gauge (e.g. 14 AWG (2.08 mm^2), or 12 AWG (3.31 mm^2)).
- An important requirement for all lengths of power cable (including any extension) is to ensure that there is a continuous **minimum** voltage at the product's power connector of 10.8 V dc, with a fully flat battery at 11 V dc.

Important: Be aware that some products in your system (such as sonar modules) can create voltage peaks at certain times, which may impact the voltage available to other products during the peaks.

Grounding

Ensure that you observe any separate grounding advice provided in the product's documentation.

More information

It is recommended that best practice is observed in all vessel electrical installations, as detailed in the following standards:

- BMEA Code of Practice for Electrical and Electronic Installations in Boats
- NMEA 0400 Installation Standard
- ABYC E-11 AC & DC Electrical Systems on Boats
- ABYC A-31 Battery chargers and Inverters
- ABYC TE-4 Lightning Protection

Warning: Grounding not required

This product is fully insulated and does NOT require separate grounding.

4.5 Network connection

The scanner must be connected to a compatible Raymarine multifunction display (MFD), either via Wi-Fi, or via a physical RayNet cable connection. Once connected, the multifunction display can show Radar echo data.

Wired (RayNet) multifunction display connection

Scanner connected to a multifunction display using a RayNet cable.

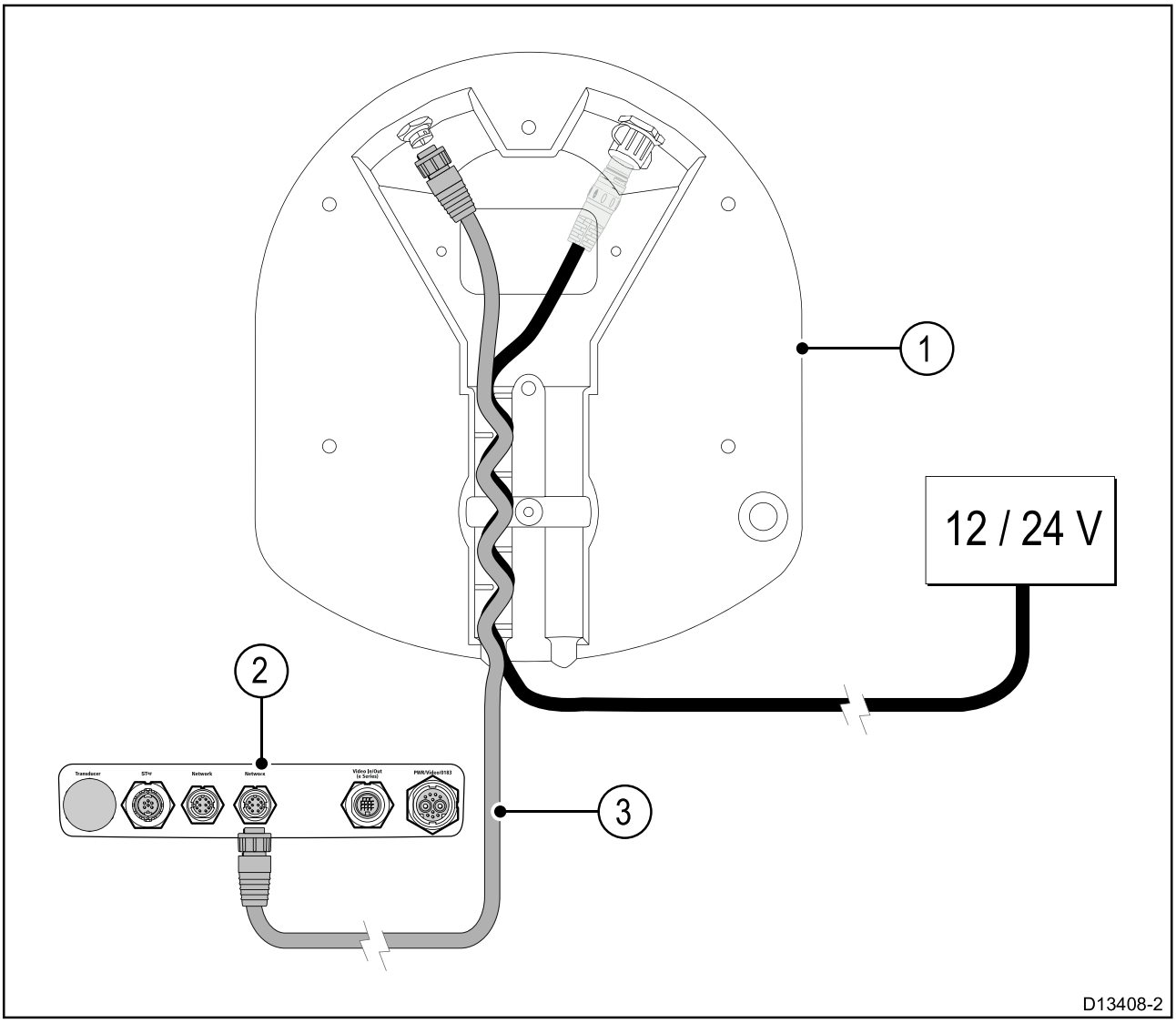

Item	Description
1	Quantum™ Radome (for clarity, only the connections area of the underside of the unit is shown here).
2	Connector panel of compatible Raymarine multifunction display (for clarity, only the connections area of the unit is shown here).
3	RayNet data cable.

Wi-Fi multifunction display connection

Scanner connected to a multifunction display using Wi-Fi.

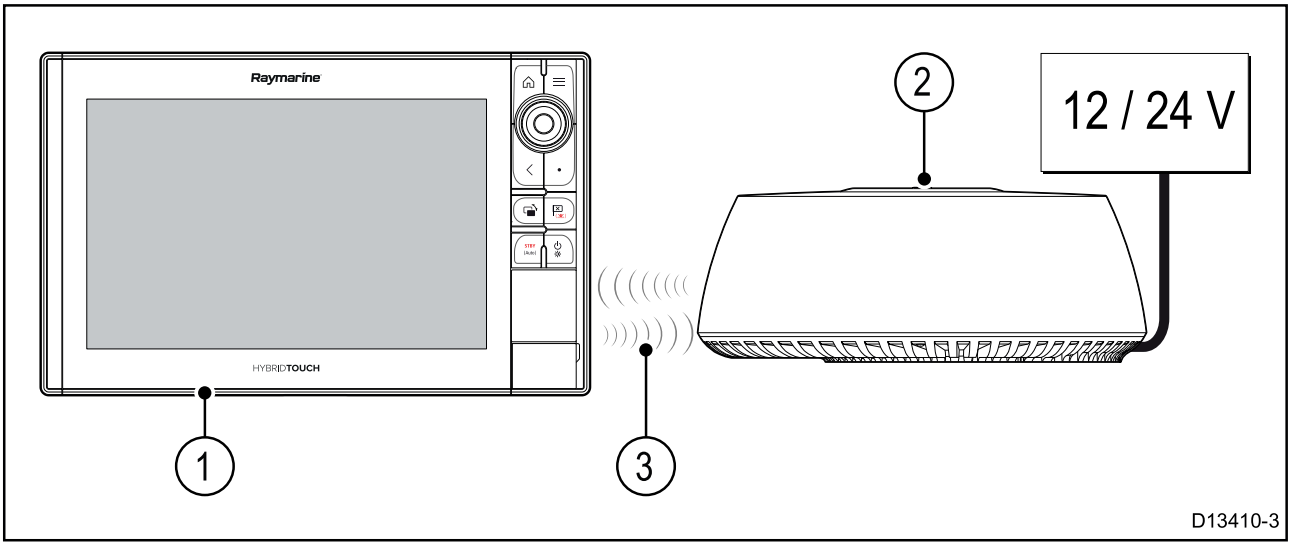

Item	Description
1	Compatible Raymarine multifunction display with Wi-Fi capability.
2	Quantum™ Radome.
3	Wi-Fi datalink.

Refer to the Chapter 7 **System checks and troubleshooting** section, and to your MFD documentation for further information about setting up the Wi-Fi connection between your MFD and the Quantum™ scanner.

Multiple multifunction display configuration

A Raymarine network switch can be used to connect the unit to more than 1 multifunction display.

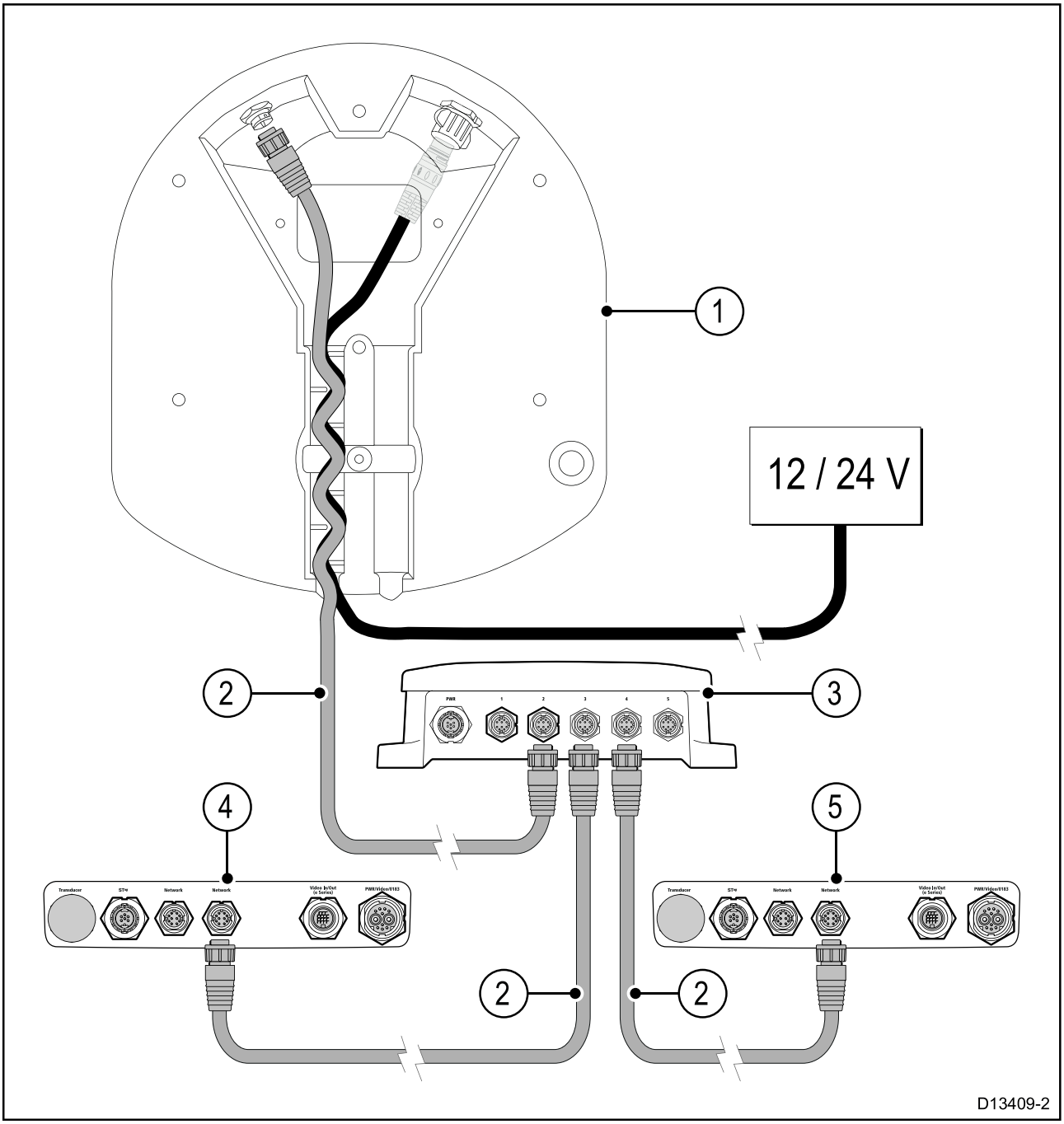

Item	Description
1	Quantum™ radome (for clarity, only the connections area of the underside of the unit is shown here).
2	RayNet cable.
3	RayNet network switch.
4	Connector panel of compatible Raymarine multifunction display (for clarity, only the connections area of the unit is shown here).
5	Connector panel of additional compatible Raymarine multifunction display (for clarity, only the connections area of the unit is shown here).

For details on available network hardware and cables refer to Chapter 11 **Spares and accessories**.

Chapter 5: Cables and connections (Quantum variant with Wi-Fi only)

Chapter contents

- 5.1 General cabling guidance on page 60
- 5.2 Power cable routing (Wi-Fi variant only) on page 62
- 5.3 Power connection on page 64

5.1 General cabling guidance

Cable types and length

It is important to use cables of the appropriate type and length

- Unless otherwise stated use only standard cables of the correct type, supplied by Raymarine.
- Ensure that any non-Raymarine cables are of the correct quality and gauge. For example, longer power cable runs may require larger wire gauges to minimize voltage drop along the run.

Routing cables

Cables must be routed correctly, to maximize performance and prolong cable life.

- Do NOT bend cables excessively. Wherever possible, ensure a minimum bend diameter of 200 mm (8 in) / minimum bend radius of 100 mm (4 in).

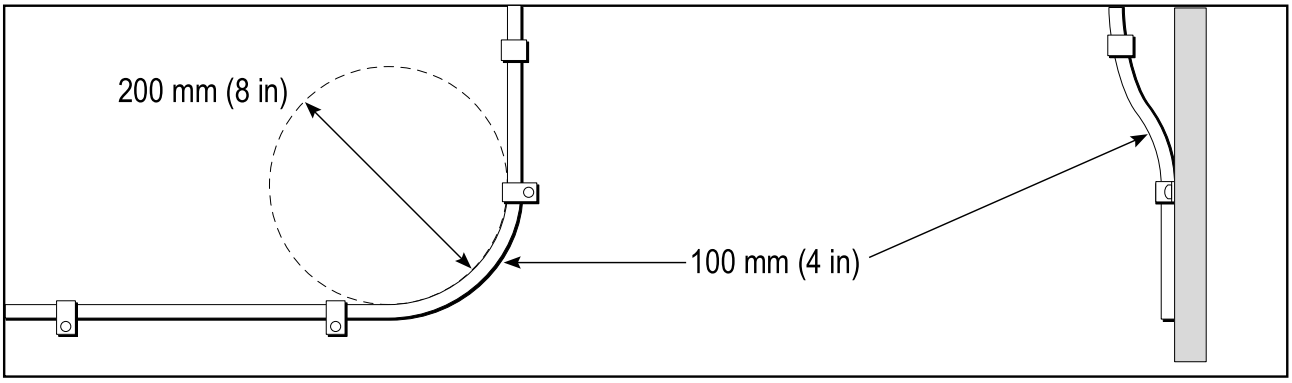

- Protect all cables from physical damage and exposure to heat. Use trunking or conduit where possible. Do NOT run cables through bilges or doorways, or close to moving or hot objects.
- Secure cables in place using tie-wraps or lacing twine. Coil any extra cable and tie it out of the way.
- Where a cable passes through an exposed bulkhead or deckhead, use a suitable watertight feed-through.
- Do NOT run cables near to engines or fluorescent lights.

Always route data cables as far away as possible from:

- other equipment and cables,
- high current carrying AC and DC power lines,
- antennas.

Strain relief

Ensure adequate strain relief is provided. Protect connectors from strain and ensure they will not pull out under extreme sea conditions.

Circuit isolation

Appropriate circuit isolation is required for installations using both AC and DC current:

- Always use isolating transformers or a separate power-inverter to run PC's, processors, displays and other sensitive electronic instruments or devices.
- Always use an isolating transformer with Weather FAX audio cables.
- Always use an isolated power supply when using a 3rd party audio amplifier.
- Always use an RS232/NMEA converter with optical isolation on the signal lines.
- Always make sure that PC's or other sensitive electronic devices have a dedicated power circuit.

Cable shielding

Ensure that all cables are properly shielded and that the cable shielding is undamaged.

Suppression ferrites

- Raymarine cables may be pre-fitted or supplied with suppression ferrites. These are important for correct EMC performance. If ferrites are supplied separately to the cables (i.e. not pre-fitted), you must fit the supplied ferrites, using the supplied instructions.
- If a ferrite has to be removed for any purpose (e.g. installation or maintenance), it must be replaced in the original position before the product is used.
- Use only ferrites of the correct type, supplied by Raymarine or its authorized dealers.
- Where an installation requires multiple ferrites to be added to a cable, additional cable clips should be used to prevent stress on the connectors due to the extra weight of the cable.

5.2 Power cable routing (Wi-Fi variant only)

There are 2 typical power cable routing scenarios, depending on how your Radar is secured to the vessel.

1. Platform mount.
2. Pole mount.

The recommended power cable routing for these 2 scenarios is illustrated in the following section.

Platform mount

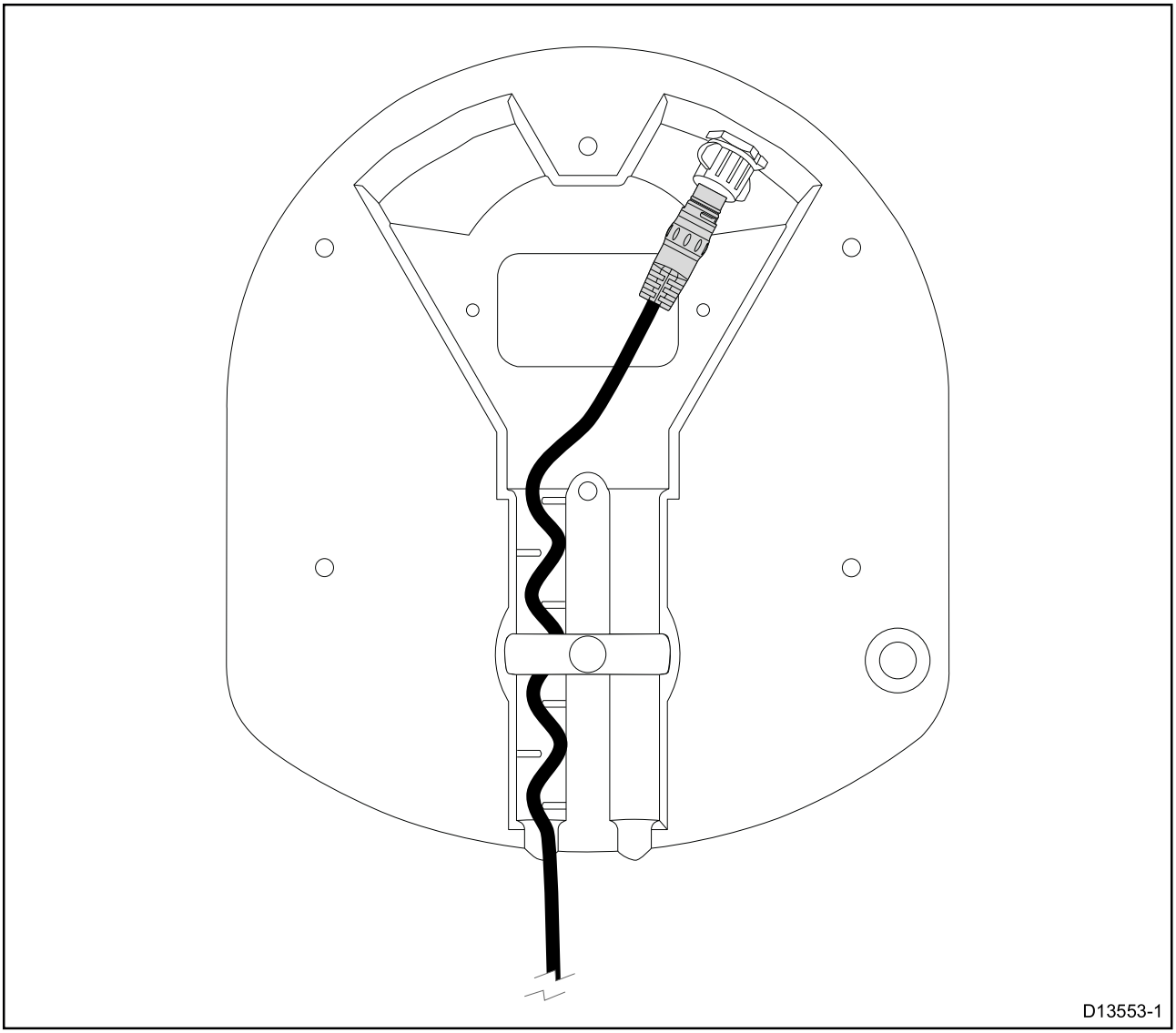

Route the power cable through the provided channel.

Pole mount

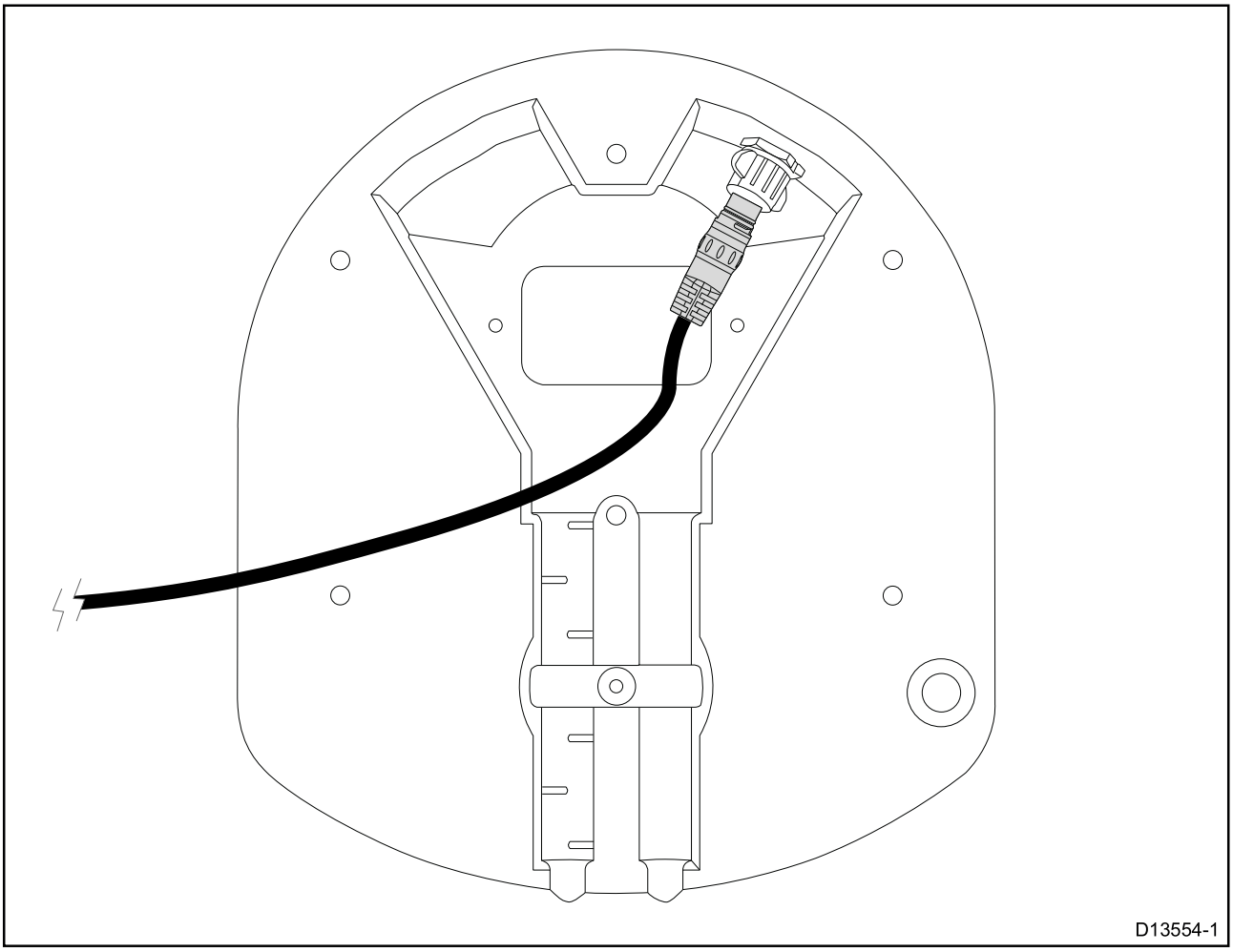

Route the power cable to the side of the unit to allow for the pole mount.

5.3 Power connection

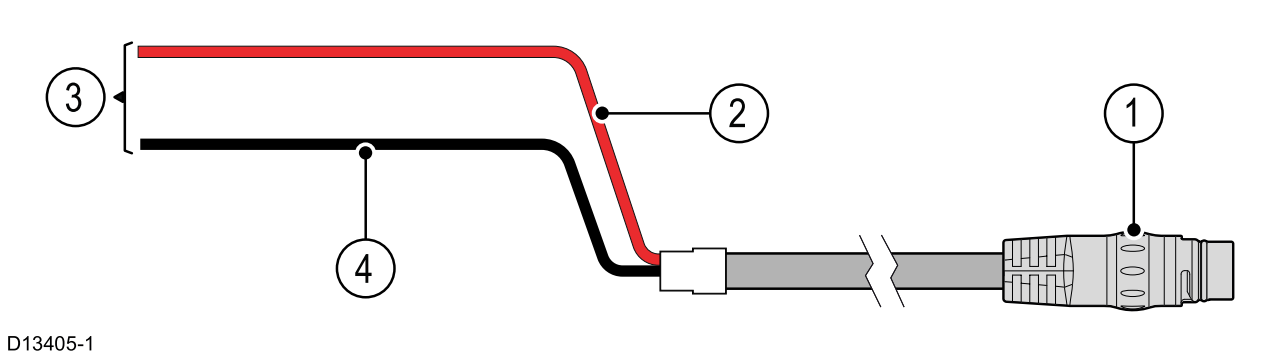

Note: A Y-adapter cable (part number A80308) is available for existing installations that already use a combined power/data cable from a Digital or HD Color Radome. The Y-adapter splits the existing combined cable into the separate data and power connectors used by the scanner.

Item	Description	Connects to:
1	Power cable.	Product's power connector.
2	Red cable (positive)	Power supply's positive terminal.
3	Connection to 12 V / 24 V power supply.	Power supply.
4	Black cable (negative)	Power supply's negative terminal.

In-line fuse and thermal breaker ratings

The following in-line fuse and thermal breaker ratings apply to your product:

In-line fuse rating	Thermal breaker rating
5 A	3 A

Note:

- The suitable fuse rating for the thermal breaker is dependent on the number of devices you are connecting. If in doubt consult an authorized Raymarine dealer.
- Your product's power cable may have an in-line fuse fitted, if not then you must add an in-line fuse / breaker to the positive wire of your product's power connection.

Warning: Grounding not required

This product is fully insulated and does NOT require separate grounding.

Power cable extension

The product is supplied with a power cable, which can be extended if required.

- The power cable for each unit in your system should be run as a separate, single length of 2-wire cable from the unit to the vessel's battery or distribution panel.
- Raymarine recommends a **minimum** wire gauge of 14AWG (2.08 mm^2) for any length of cable extension.
- For all lengths of extension to the power cable, ensure there is a continuous **minimum** voltage at the product's power connector of 10.8 V with a fully flat battery at 11 V.

Important: Be aware that some products in your system (such as sonar modules) can create voltage peaks at certain times, which may impact the voltage available to other products during the peaks.

Power distribution

Recommendations and best practice.

- The product is supplied with a power cable, either as a separate item or a captive cable permanently attached to the product. Only use the power cable supplied with the product. Do NOT use a power cable designed for, or supplied with, a different product.

- Refer to the *Power connection* section for more information on how to identify the wires in your product's power cable, and where to connect them.
- See below for more information on implementation for some common power distribution scenarios.

Important:

When planning and wiring, take into consideration other products in your system, some of which (e.g. sonar modules) may place large power demand peaks on the vessel's electrical system, which may impact the voltage available to other products during the peaks.

Note:

The information provided below is for guidance only, to help protect your product. It covers common vessel power arrangements, but does NOT cover every scenario. If you are unsure how to provide the correct level of protection, please consult an authorized Raymarine dealer or a suitably qualified professional marine electrician.

Implementation — direct connection to battery

- The power cable supplied with your product may be connected directly to the vessel's battery, via a suitably rated fuse or breaker.
- The power cable supplied with your product may NOT include a separate drain wire. If this is the case, only the power cable's red and black wires need to be connected.
- If the supplied power cable is NOT fitted with an inline fuse, you MUST fit a suitably rated fuse or breaker between the red wire and the battery's positive terminal.
- Refer to the inline fuse ratings provided in the product's documentation.
- If you need to extend the length of the power cable supplied with your product, ensure you observe the dedicated *Power cable extensions* advice provided in the product's documentation.

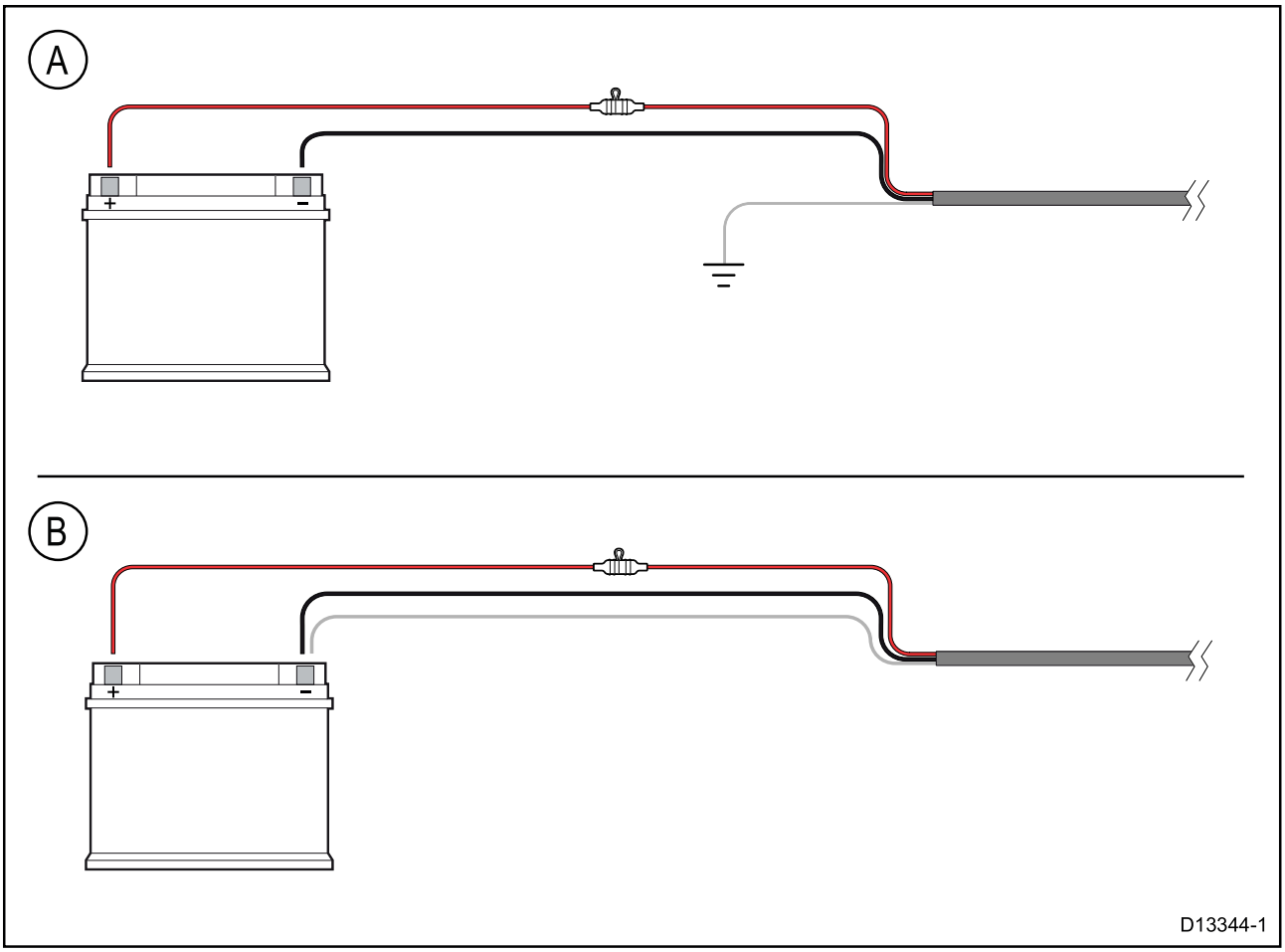

A	Battery connection scenario A: suitable for a vessel with a common RF ground point. In this scenario, if your product's power cable is supplied with a separate drain wire then it should be connected to the vessel's common ground point.
B	Battery connection scenario B: suitable for a vessel without a common grounding point. In this case, if your product's power cable is supplied with a separate drain wire then it should be connected directly to the battery's negative terminal.

Implementation — connection to distribution panel

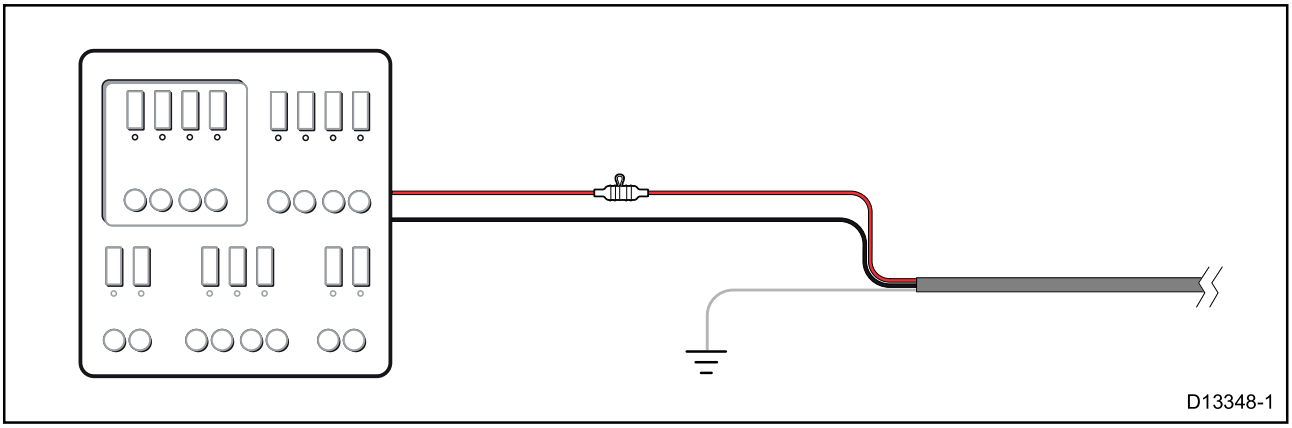

- Alternatively, the supplied power cable may be connected to a suitable breaker or switch on the vessel's distribution panel or factory-fitted power distribution point.
- The distribution point should be fed from the vessel's primary power source by 8 AWG (8.36 mm^2) cable.
- Ideally, all equipment should be wired to individual suitably-rated thermal breakers or fuses, with appropriate circuit protection. Where this is not possible and more than 1 item of equipment shares a breaker, use individual in-line fuses for each power circuit to provide the necessary protection.

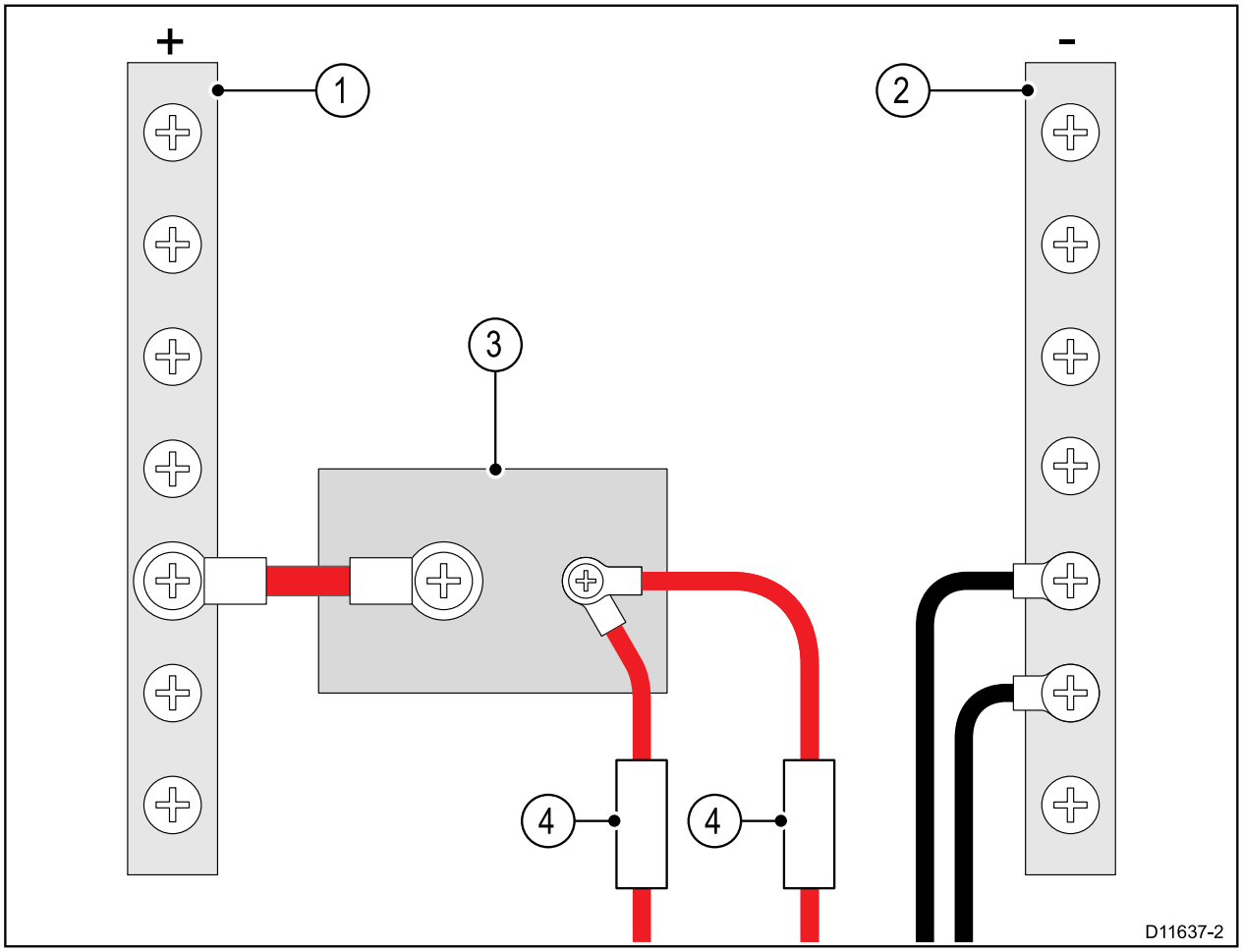

1	Positive (+) bar
2	Negative (-) bar
3	Circuit breaker
4	Fuse

- In all cases, observe the recommended breaker / fuse ratings provided in the product's documentation.

Important:

Be aware that the suitable fuse rating for the thermal breaker or fuse is dependent on the number of devices you are connecting.

Power cable extension

If you need to extend the length of the power cable supplied with your product, ensure you observe the following advice:

- The power cable for each unit in your system should be run as a separate, single length of 2-wire cable from the unit to the vessel's battery or distribution panel.
- For power cable extensions, a **minimum** wire gauge of 16 AWG (1.31 mm^2) is recommended. For cable runs longer than 15 meters, you may need to consider a thicker wire gauge (e.g. 14 AWG (2.08 mm^2), or 12 AWG (3.31 mm^2)).
- An important requirement for all lengths of power cable (including any extension) is to ensure that there is a continuous **minimum** voltage at the product's power connector of 10.8 V dc, with a fully flat battery at 11 V dc.

Important: Be aware that some products in your system (such as sonar modules) can create voltage peaks at certain times, which may impact the voltage available to other products during the peaks.

Grounding

Ensure that you observe any separate grounding advice provided in the product's documentation.

More information

It is recommended that best practice is observed in all vessel electrical installations, as detailed in the following standards:

- BMEA Code of Practice for Electrical and Electronic Installations in Boats
- NMEA 0400 Installation Standard
- ABYC E-11 AC & DC Electrical Systems on Boats
- ABYC A-31 Battery chargers and Inverters
- ABYC TE-4 Lightning Protection

Warning: Grounding not required

This product is fully insulated and does NOT require separate grounding.

Chapter 6: Mounting

Chapter contents

- 6.1 Mounting pre-requisite: "breather" holes on page 70
- 6.2 Mounting the scanner on page 71
- 6.3 Radar scanner protection — sailing vessels on page 75

6.1 Mounting pre-requisite: "breather" holes

The base of the unit features a "breather", a series of small holes which allow air to circulate between the underside of the unit and the mounting surface.

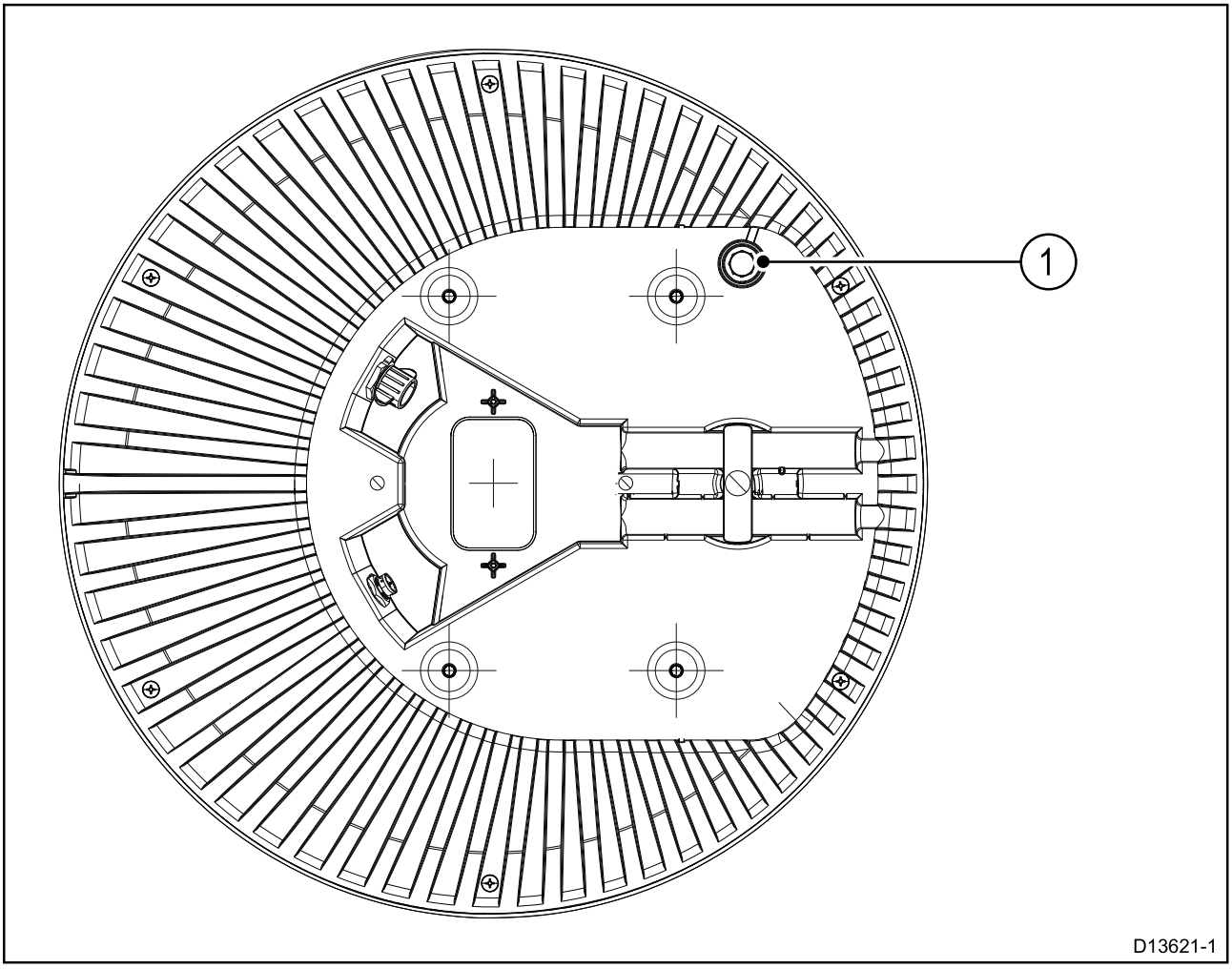

1. Location of “breather” holes.

Ensure that the breather is not blocked in any way. Examples of obstacles to airflow include sealant and paint.

If necessary, use additional washers to allow a small gap between the underside of the unit and the mounting surface, for airflow.

6.2 Mounting the scanner

Use a mounting location that:

- Is robust enough to support the Quantum™ scanner, under seagoing conditions.
- Meets the requirements described under *Scanner Position*.

Then:

1. Tape the template to the mounting platform, ensuring that the arrow on the template is pointed towards the front of the vessel.

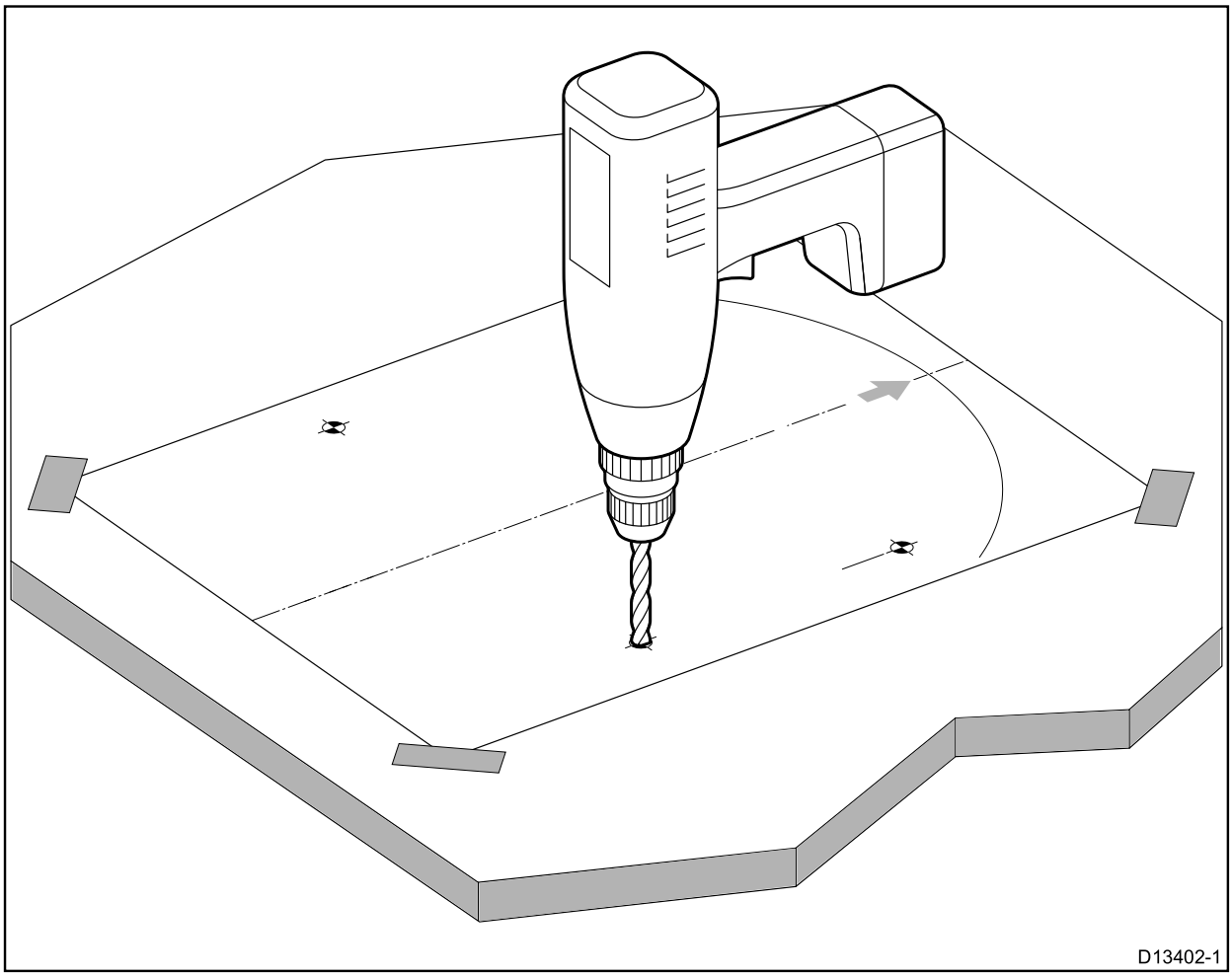

2. Drill 3 mm pilot holes in the four positions shown on the template.
3. Drill out the pilot holes to 10 mm diameter.

4. Place the Quantum™ scanner in position. If you are fitting it on a planing vessel, shim the rear of the scanner, so that the beam points slightly down in the forward direction when the boat is at rest, to compensate for the bow rising at cruising speed

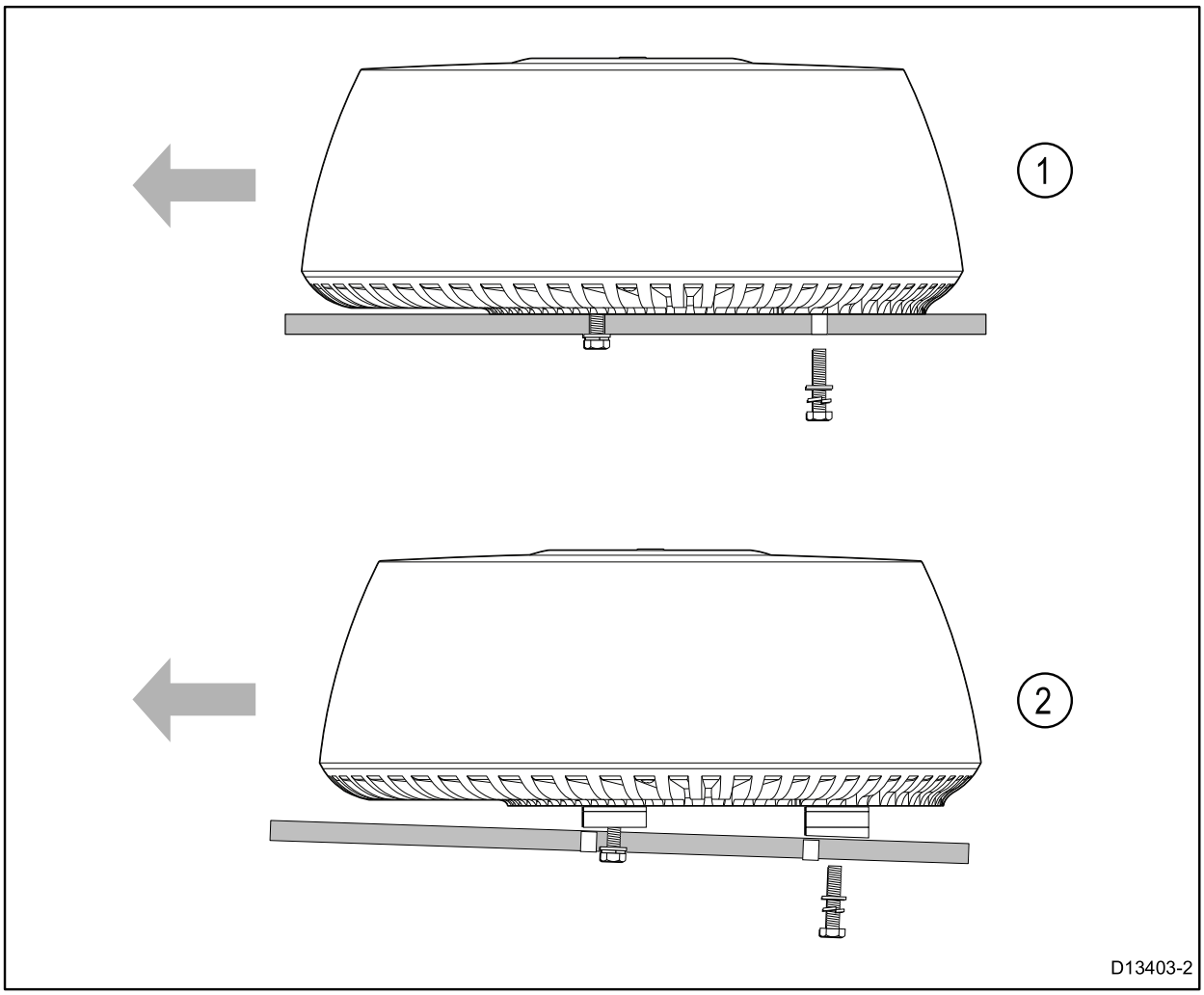

Item	Description
1	Mounting platform, non-planing boat (level install)
2	Mounting platform, planing boat (typical planing angle shown)

5. Before securing the scanner to the mounting platform, connect the power cable (and optionally a data cable), ensuring that all cables are routed appropriately. See the 4.3 **Connections overview** section for further information about making connections, and cable routing.
6. Ensuring that the bolts have a **minimum** insertion in the scanner base of 16 mm (0.63 in.), and a **maximum** of 22 mm (0.87 in.) (allowing for washers), secure the scanner with the 4 bolts, flat

washers and spring washers provided, as illustrated. If necessary, use appropriate shims or extra washers to limit the length of bolt entering the scanner base.

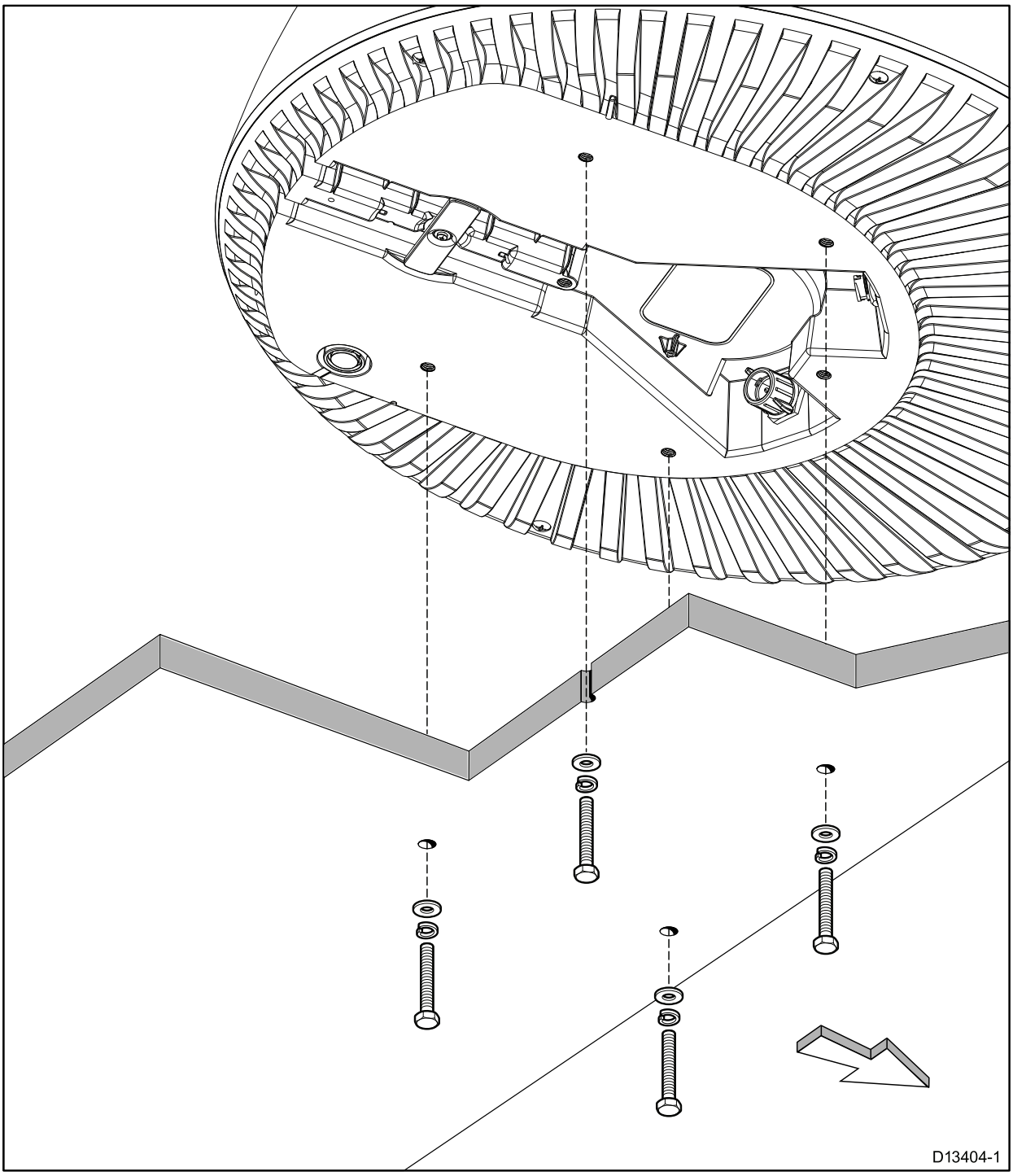

7. Tighten the bolts to a torque of 15 Nm (133 ft lbf).

8. Attach a safety lanyard (not supplied) to your vessel, and secure the free end to the scanner using the attachment point shown in the following illustration:

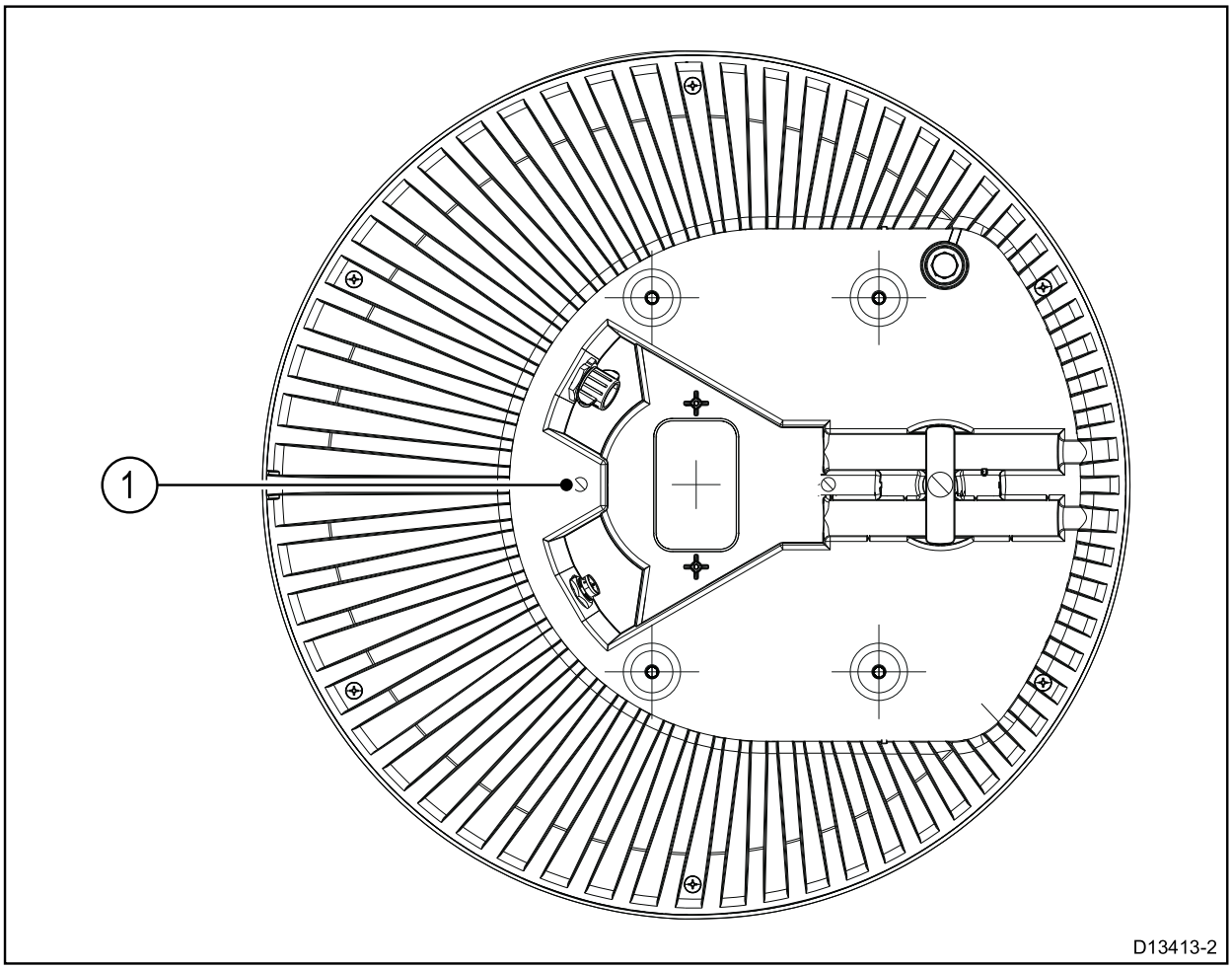

Item	Description
1	Safety lanyard attachment point.

Note: If you are installing the Radar scanner on a sailing vessel, additional protection for the Radar scanner may be required. Refer to 6.3 **Radar scanner protection — sailing vessels**.

Multiple Quantum Radar scanners

Only 1 (one) Quantum™ Radar scanner can be used at any one time, per networked system.

If you have more than one Quantum™ Radar scanner installed on your vessel and want to use them at the same time, the multifunction displays to which the scanners are connected must NOT be networked together. This applies to Quantum™ scanners connected either wired or wirelessly.

For more information, refer to: **Multiple Quantum Radars — more information**.

Multiple Radar scanners — location requirements

Important location considerations when installing multiple radar scanners on the same vessel.

- Scanners should be mounted above each other, vertically separated by at least 0.5 m (1.6 ft). This applies to all installation locations on the vessel.
- Multiple scanners should be mounted in a way that minimizes interference between the vertical beamwidths of the 2 scanners.
- In all cases, you should aim to achieve as much physical separation as possible, to minimize any potential interference.

6.3 Radar scanner protection — sailing vessels

Additional considerations apply when installing the Radar scanner on a sailing vessel.

- When mounting the Radar scanner unit onto the mast, check that the unit is not fouled by the sails, especially when tacking.
- Depending on the type of sailing vessel and the design of the sailplan, a Radar scanner guard should be attached to the mast if the sails or rigging contact either the Radar scanner unit or the mounting bracket. Without a proper Radar guard, serious damage can result to the Radar mounting bracket and the Radar itself. In extreme cases, such damage could result in the Radar scanner unit being pulled off the mast. Therefore, it is recommended that a Radar scanner guard should be mounted additionally and separately to the Radar scanner mounting bracket.
- To prevent the risk of the Radar scanner unit falling after it has been damaged, the security lanyard supplied with the mast bracket MUST be secured properly to the mast and to the Radar scanner unit, according to the instructions provided with the bracket. If a safety lanyard is not supplied with the mounting bracket, contact your local dealer for appropriate parts. Do NOT attach other equipment to either the Radar scanner unit or the bracket.
- Raymarine strongly recommends that you check the condition and security of the bracket mounting feet, the security lanyard(s), the Radar scanner guard, and the Radar scanner unit itself, on a yearly basis (or more frequently depending on environmental applications). Any fittings should be replaced as appropriate.

The following illustration shows an example of an installation featuring a Radar scanner fitted to a typical mounting bracket, a Radar guard attached to the mast (separately to the Radar mounting bracket), and safety lanyards:

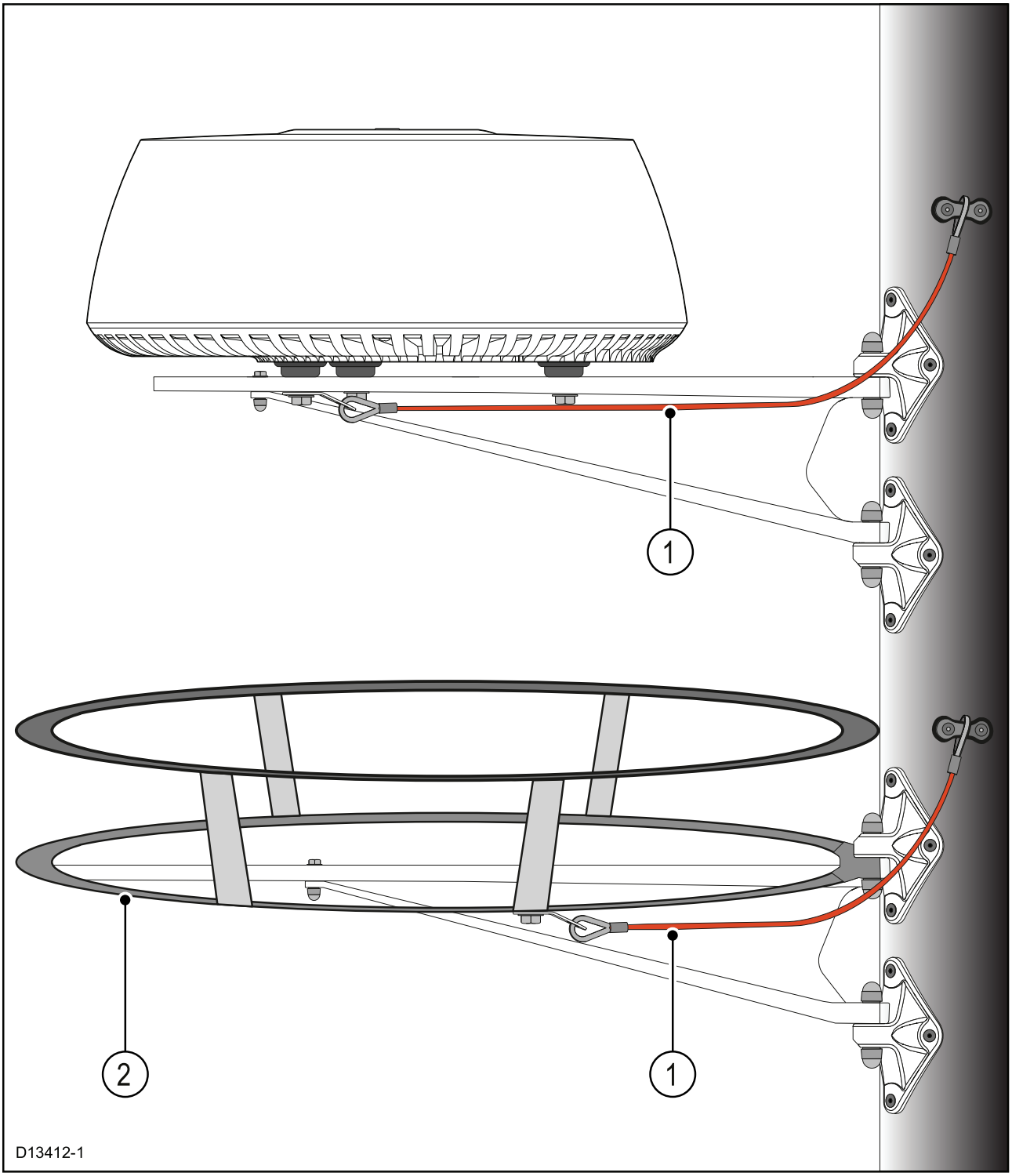

1. Example of a typical safety lanyard.
2. Example of a typical Radar scanner guard, attached to the mast independently of the Radar mounting bracket.

Note: The Radar guard shown in the illustration above is provided as an example only. The exact design and positioning of the Radar guard is wholly dependent on the nature of your vessel, sailplan, and installation environment. For example, for some vessels it is appropriate to locate the guard above the Radar scanner; for other vessels, it may be more appropriate to fit it below the scanner. Raymarine does not supply Radar guards but recommends that you select a guard that is attached directly to the mast and is completely separate to the Radar mounting bracket. It may be necessary to have a Radar guard custom designed to suit your specific vessel and installation environment. Please contact your local dealer for further advice.

Chapter 7: System checks and troubleshooting

Chapter contents

- 7.1 Post installation procedures on page 78
- 7.2 Troubleshooting on page 82

7.1 Post installation procedures

Before using the product, carry out the following:

- Mechanical checks.
- Switch on and initial setup.

Mechanical checks

Before switching on the product:

- Ensure that:
  - All securing bolts are fully tightened and the appropriate mechanical locking washers are in place.
  - All connections are securely made.
  - All connecting cables and wires are secured and protected as necessary.
- Ask your local Raymarine authorized installer to check the installation.

Connecting to a Radar scanner over RayNet

Once you've made all the relevant power and data connections as described in the *Cables and connections* section, you can use the Radar application on a compatible display to conduct further initial tests.

For detailed instructions on how to conduct the initial tests, refer to the *Radar application* chapter of the Operations handbook for your display.

Powering on a Quantum Radar

With the radar scanner in a powered off state, and connected to a compatible multifunction display (MFD):

1. On the MFD, launch the Radar application.
   A message box is displayed indicating that a Radar scanner is off or "not connected".
2. Select **On** from the onscreen message box.
   The Radar will power up in Standby mode.
3. Once the Radar has powered up, select **Tx** to start the Radar transmitting.

Radar returns will now be displayed onscreen.

Pairing with a Quantum Radar using Wi-Fi

If your Radar scanner supports a Wi-Fi connection, you can connect to a **LightHouse™** MFD which also supports Wi-Fi. During pairing, the Wi-Fi credentials of all MFDs with Wi-Fi switched on are sent to the Quantum Radar. At subsequent power cycles the Quantum Radar will automatically connect to the MFD with the strongest signal.

Note:

1. During initial set up you will have 10 minutes in which to connect the Radar to your MFD. After this time, if no connection is made, the Radar will automatically go to Sleep. If this occurs, power cycle the Radar to bring it out of Sleep mode and establish a connection.
2. Networked MFDs that only have their Wi-Fi enabled after the initial pairing period, will send Wi-Fi credentials to the Radar when their Wi-Fi is switched on.

1. Apply power to your MFD(s).
2. Power on and then enable the Wi-Fi connection to the MFDs which have the strongest signal, as identified during the pre-installation site survey. Usually these will be the MFDs closest to and / or with the clearest line of sight to the Radar).
3. Apply power to your Radar scanner.
4. Select **Quantum Radar** from the settings menu on the MFD:
   i. For LightHouse 2 MFD: **Homescreen** > **Set-up** > **System Settings** > **External Devices** > **Quantum Radar** > **Pair with Quantum Radar**.
   ii. For LightHouse 3 MFD: **Homescreen** > **Settings** > **This display (tab)** > **Pair with Quantum**.
5. If prompted, select **OK** to enable your MFD's Wi-Fi connection.

6. (For LightHouse 2 only): Enter the Radar's SSID (e.g. `Quantum_1234567`) in the **SSID** field.
7. Enter the passcode (e.g. `901589f5`) in the **Passcode** field.
   Refer to the Retain your Wi-Fi Passcode section for details on locating your SSID and Passcode.

LightHouse 2 connection screen:

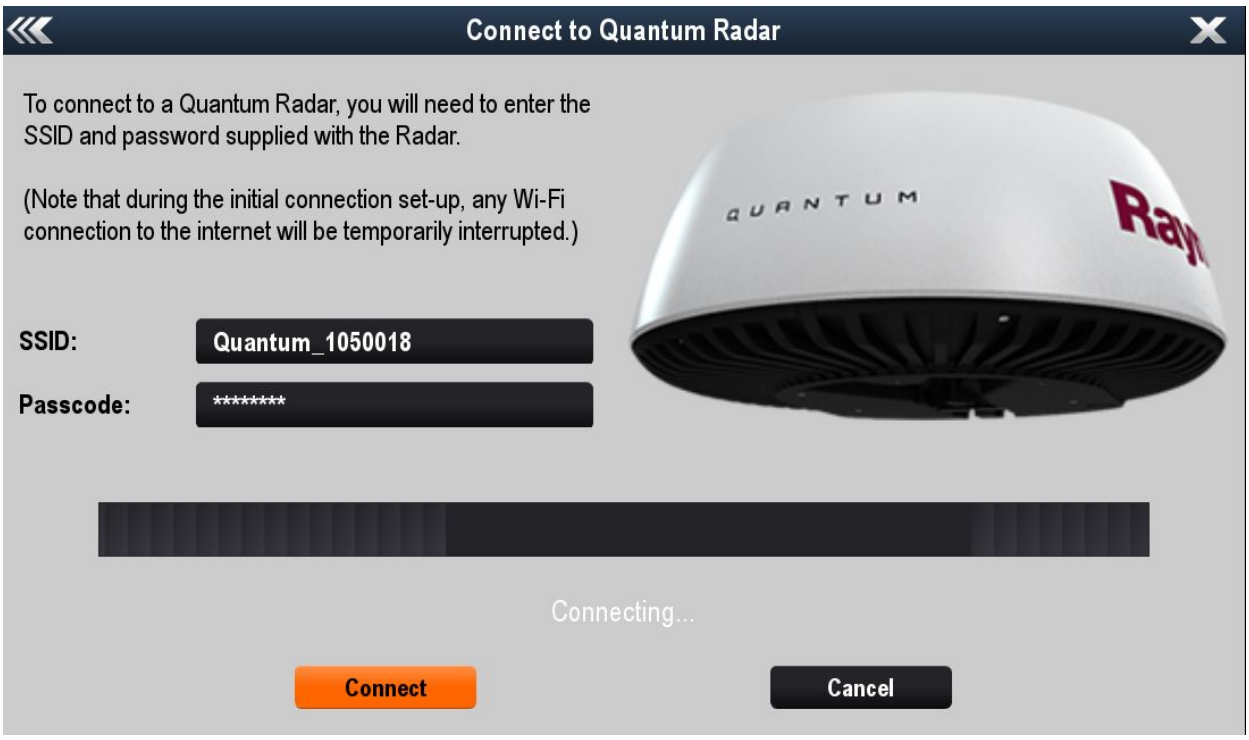

LightHouse 3 connection screen:

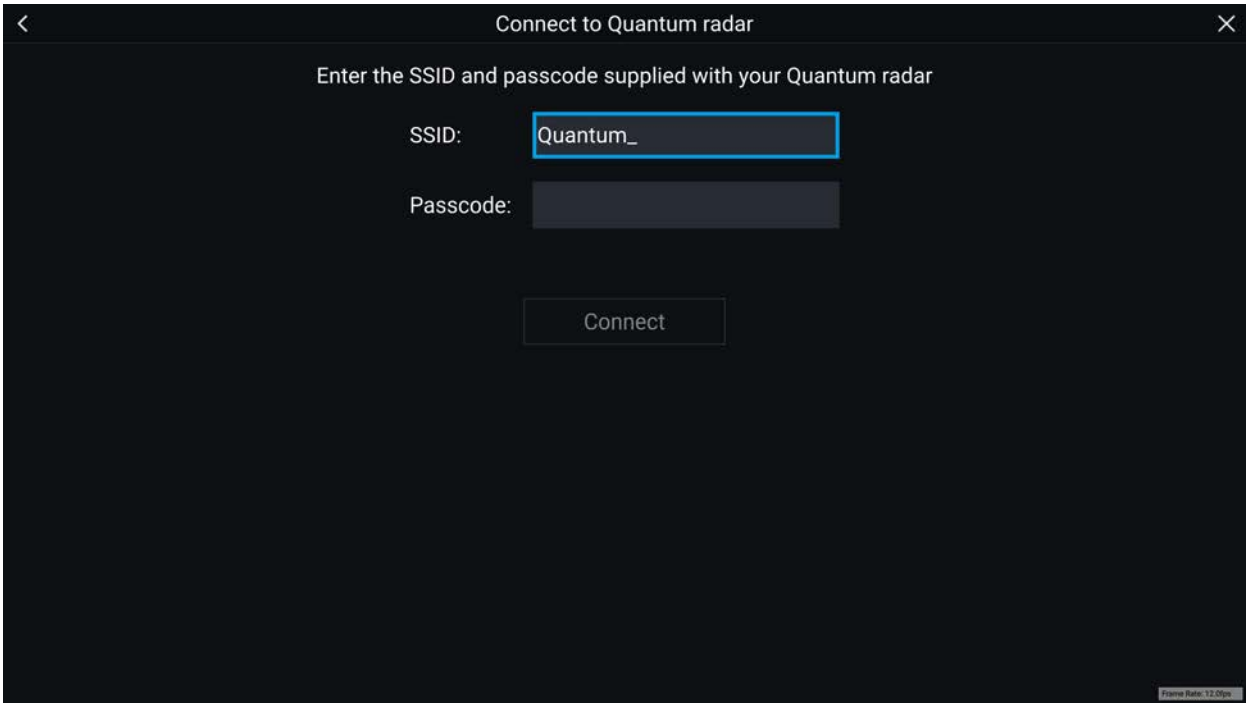

Important:

- Ensure that the SSID and Passcode are entered exactly as shown on the serial number label that was supplied with the Radar.
- The SSID is always made up of the word "**Quantum**", followed by an underscore "**_**", followed by the product's 7 digit **serial number**, (e.g. **Quantum_1234567**).

8. Select **Connect**.

   The initial connection can take up to 2 minutes to complete. If the connection does not complete within 2 minutes, power cycle the Radar and repeat Steps 4 to 8.

9. Select **OK** from the Successful Connection pop-up.
10. Open a Radar application page.
11. Check that the reported Radar on the power / transmit pop-up is the Radar that you have just paired with.
12. If the correct Radar is reported, select **Tx** (Transmit).
13. If the reported Radar is not the Radar scanner you just paired with, select the correct Radar from the Radar application menu: **Menu > Select Radar:** and then select **Tx** (Transmit).

The Radar image can be displayed on all networked MFDs.

MFD access point connection when connected to Quantum Wi-Fi

Depending on you MFD variant, you may be restricted from connecting your MFD to a Wi-Fi access point, if a Quantum Radar that is connected using Wi-Fi is currently transmitting on the system.

a, **c**, **e**, **gS Series** and **Axiom** MFDs CANNOT connect to a Wi-Fi access point if there is a transmitting Wi-Fi connected Quantum Radar in the system. To connect these MFDs to a Wi-Fi access point the Quantum Radar must be placed in Standby mode first.

eS Series and **Axiom Pro** MFDs CAN connect to a Wi-Fi access point at the same time as being connected to a transmitting Wi-Fi connected Quantum Radar.

Standby and sleep modes for Wi-Fi connections

The radar scanner has 2 modes which may initially prevent you from successfully pairing the radar to an MFD via Wi-Fi, in the event that the Wi-Fi connection between the 2 devices is lost. These modes are part of the scanner's normal operation, but it's important to understand how these modes can potentially impact the pairing process.

- **Sleep mode** — If the connection to the MFD is lost while the scanner is in **Standby** mode, the scanner will switch to Sleep mode within 30 minutes. When the connection to the MFD is restored, return the scanner to Standby mode using the **Power up Radar** option on the MFD's Shortcut screen, accessible by momentarily pressing the MFD's Power button.
- **Standby mode** — If the connection to the MFD is lost while the scanner is in **Transmit** mode, the scanner will switch to Standby mode within 5 seconds. When the connection to the MFD is restored, return the scanner to Transmit mode using the **Radar: Tx** option on the MFD's Shortcut screen.

For a full description of all the Radar modes and associated on-screen status symbols, refer to the *Radar scanner status symbols* topic in the *Radar application* chapter of your MFD's Operations handbook.

Retain your Wi-Fi passcode

To connect to the Radar using Wi-Fi (wireless), you will need to know the unit's **SSID**, and **Passcode**.

Both the SSID and Passcode are provided on the serial number label on the underside of the unit, and on spare serial number labels supplied in the box. You may wish to make a separate note of this information and keep in a secure location. You should also keep the Radar scanner packaging in a safe place for future reference.

Operation instructions

For detailed operation instructions for your product, refer to the documentation that accompanies your display.

All product documentation is available to download from the Raymarine website: www.raymarine.com/manuals.

MARPA / Auto acquisition data source requirements

Use of the MARPA/Auto acquisition Radar features requires the following data sources to be available on your system (e.g. connected to your multifunction display, via SeaTalkng ® or NMEA 0183).

Data type	Example data source
COG (Course Over Ground)	GPS or GNSS receiver (MFD internal receiver or external receiver).
SOG (Speed Over Ground)	GPS or GNSS receiver (MFD internal receiver or external receiver).
HDG / HDT (True Heading)	Compass or Autopilot sensor providing Fastheading data (e.g. Evolution EV-1 / EV-2).

7.2 Troubleshooting

The troubleshooting information provides possible causes and corrective action required for common problems associated with installation and operation of your product.

Before packing and shipping, all Raymarine products are subjected to comprehensive testing and quality assurance programs. If you do experience problems with your product this section will help you to diagnose and correct problems in order to restore normal operation.

If after referring to this section you are still having problems with your product, please refer to the Technical support section of this manual for useful links and Raymarine Product Support contact details.

Troubleshooting procedure

Use the following table to identify problems and remedial actions.

Symptom	Action
No connection can be made to the scanner.	Ensure the data cable (if used) is connected at both ends and is in good condition. If using a Wi-Fi (wireless) connection to the scanner unit, check that you have entered the correct Wi-Fi passcode for the SSID that matches your scanner. Both the SSID and Wi-Fi passcode are provided on the scanner packaging, and are also shown on the serial number label on the underside of the unit. Refer to your multifunction display (MFD) documentation for further information. If the scanner unit has shut down, awaken it by using the **Power Up Radar** option in the Shortcut screen, accessible on your MFD by momentarily pressing the MFD's power key. The Radar unit will shut down within 30 minutes if a wireless (Wi-Fi) connection can't be made to a multifunction display unit (MFD). Ensure power supply thermal breaker has not tripped or fuse has not blown. If necessary, reset breaker or replace fuse ONCE ONLY. If breaker keeps tripping or fuse keeps blowing, contact a Raymarine authorized dealer for assistance. Ensure power supply maintains the correct voltage when the system is switched on. Ensure all products in the system have the correct software. Refer to www.raymarine.com/software for the latest software updates and the software update procedure for your product. If the Quantum™ Radome is connected to the multifunction display (MFD) via a SeaTalk hs or RayNet network switch, ensure that: • All relevant equipment is correctly connected to the network switch. • The network switch power supply is satisfactory. • The network switch is in good condition. • Network cables are securely connected and in good condition.
Displayed bearing is different to the true bearing.	Carry out the bearing alignment procedure described in the MFD Operations manual. **Note:** Heading (HDG) is displayed in the Radar application on the multifunction display (MFD). Please be aware that bearing alignment refers to the **relative** bearing of **targets** to the vessel's bow using visual checks / traditional means.

Multiple Quantum Radars — more information

Only 1 (one) Quantum™ Radar scanner can be powered at any one time, per networked system.

- It is possible to have 1 Quantum™ + 1 NON-Quantum Raymarine Digital radar scanner powered at the same time, on the same networked system.
- It is NOT possible to have 2 Quantum™ Radar scanners connected via Wi-Fi powered at the same time, on the same networked system, or a single standalone display. While it is technically

possible to power up 2 Quantum™ radar scanners connected via Wi-Fi separately to 2 standalone (non-networked) displays, or 2 displays which each belong to a different RayNet network, this configuration is NOT recommended. There may be Wi-Fi radio interference between 2 Quantum™ radars operating at the same time.

- It is NOT recommended to have 2 Quantum™ Radar scanners connected via RayNet powered at the same time, on the same networked system. However, it is possible to have 2 Quantum™ radar scanners connected via RayNet separately to 2 standalone (non-networked) displays, or 2 displays which each belong to a different RayNet network.
- It is NOT possible to have 2 Quantum™ Radar scanners powered at the same time, where one is connected via RayNet, and the other is connected via Wi-Fi, on the same networked system, or single standalone display. However, it is possible to have 2 Quantum™ radar scanners powered in this configuration if they are connected separately to 2 standalone (non-networked) displays, or 2 displays which each belong to a different RayNet network.

Retain your Wi-Fi passcode

To connect to the Radar using Wi-Fi (wireless), you will need to know the unit's **SSID**, and **Passcode**.

Both the SSID and Passcode are provided on the serial number label on the underside of the unit, and on spare serial number labels supplied in the box. You may wish to make a separate note of this information and keep in a secure location. You should also keep the Radar scanner packaging in a safe place for future reference.

Wi-Fi troubleshooting

Before troubleshooting problems with your Wi-Fi connection, ensure that you have followed the Wi-Fi location requirements guidance provided in the relevant installation instructions and performed a power cycle/reboot of the devices you are experiencing problems with.

Cannot find network

Possible cause	Possible solutions
Wi-Fi not currently enabled on devices.	Ensure Wi-Fi is enabled on both Wi-Fi devices and rescan available networks.
Some devices may automatically turn off Wi-Fi when not in use to save power.	Power cycle / reboot devices and rescan available networks.
Device not broadcasting.	1. Try to enable broadcasting of the device's network using the Wi-Fi settings on the device you are trying to connect to. 2. You may still be able to connect to the device, when it is not broadcasting, by manually entering the device's Wi-Fi Name / SSID and passphrase in the connection settings of the device you are trying to connect.
Devices out of range or signal being blocked.	Move devices closer together or, if possible remove the obstructions and then rescan available network.

Cannot connect to network

Possible cause	Possible solutions
Some devices may automatically turn off Wi-Fi when not in use to save power.	Power cycle/reboot devices and retry the connection.
Trying to connect to the wrong Wi-Fi network	Ensure you are trying to connect to the correct Wi-Fi network, the Wi-Fi network's name can be found in the Wi-Fi settings on the broadcasting device (the device that you are trying to connect to).

Possible cause	Possible solutions
Incorrect network credentials	Ensure you are using the correct passphrase, the Wi-Fi network's passphrase can be found in the Wi-Fi settings on the broadcasting device (the device that you are trying to connect to).
Bulkheads, decks and other heavy structure can degrade and even block the Wi-Fi signal. Depending on the thickness and material used it may not always be possible to pass a Wi-Fi signal through certain structures	1. Try repositioning the devices so the structure is removed from the direct line of sight between the devices, or 2. If possible use a wired connection instead.
Interference being caused by other Wi-Fi enabled or older Bluetooth enabled devices (Bluetooth and Wi-Fi both operate in the 2.4 GHz frequency range, some older bluetooth devices may interfere with Wi-Fi signals.)	1. Change the Wi-Fi Channel of the device you are trying to connect to and retry the connection. You can use free Wi-Fi analyzer apps on your smart device to help you choose a better channel (channel with least traffic). 2. Temporarily disable each wireless device in turn until you have identified the device causing the interference.
Interference caused by other devices that use the 2.4GHz frequency See list below of some common devices that use the 2.4GHz frequency: • Microwave ovens • Fluorescent lighting • Cordless phones / baby monitors • Motion sensors	Temporarily switch off each device in turn until you have identified the device causing the interference, then remove or reposition the offending device(s).
Interference caused by electrical and electronic devices and associated cabling could generate an electromagnetic field which may interfere with the Wi-Fi signal.	Temporarily switch off each item in turn until you have identified the device causing the interference, then remove or reposition the offending device(s).

Connection extremely slow and or keeps dropping out

Possible cause	Possible solutions
Wi-Fi performance degrades over distance so products farther away will receive less network bandwidth. Products installed close to their maximum Wi-Fi range will experience slow connection speeds, signal drop outs or not being able to connect at all.	• Move devices closer together. • For fixed installations such as a Quantum Radar, enable the Wi-Fi connection on an MFD installed closer to the device.
Interference being caused by other Wi-Fi enabled or older Bluetooth enabled devices (Bluetooth and Wi-Fi both operate in the 2.4 GHz frequency range, some older bluetooth devices may interfere with Wi-Fi signals.)	1. Change the Wi-Fi Channel of the device you are trying to connect to and retry the connection. You can use free Wi-Fi analyzer apps on your smart device to help you choose a better channel (channel with least traffic). 2. Temporarily switch off each device in turn until you have identified the device causing the interference, then remove or reposition the offending device(s).
Interference from devices on other vessels. When in close proximity to other vessels, for example, when moored up in a marina, many other Wi-Fi signals may be present.	1. Change the Wi-Fi Channel of the device you are trying to connect to and retry the connection. You can use free Wi-Fi analyzer apps on your smart device to help you choose a better channel (channel with least traffic).

Possible cause	Possible solutions
	2. If possible, move your vessel to a location with less Wi-Fi traffic.

Network connection established but no data

Possible cause	Possible solutions
Connected to the wrong network.	Ensure that your devices is connected to the correct network.
Device software incompatibility	Ensure both devices are running the latest available software.
It may be possible that the device has become defective	1. Try updating software to a later version, or 2. try reinstalling the software. 3. Obtain new replacement device.

Mobile application running slowly or not at all

Possible cause	Possible solutions
Raymarine app not installed	Install mobile app from relevant app store.
Raymarine app version not compatible with MFD software	Ensure mobile app and MFD software are latest available versions.
Mobile apps not enabled on MFD	Enable “Viewing only” or “Remote Control” as required in the Mobile Apps setting on your MFD.

Wi-Fi connection recovery

You should use the SSID and Passcode supplied with your Radar to pair the Radar with your MFD. In the event that the original SSID and Passcode cannot be located follow the steps below to try and re-connect to your Radar.

1. The Radar will store the Wi-Fi credentials (SSID and passphrase) of the last 10 devices it has been paired with, this means that you can use the Wi-Fi credentials from a MFD that has previously been paired with the Quantum Radar. Enter the MFD’s Wi-Fi Name and Wi-Fi Passphrase on the Quantum Radar pairing page and try to connect. The MFD’s Wi-Fi Name (SSID) and Passphrase is located in the Wi-Fi menu: (**Homescreen** > **Set-up** > **System Set-up** > **Wireless Connections** > **Wi-Fi** > **Wi-Fi Sharing**)
2. If the above method does not work then contact Technical Support who will be able to assist you further.

Operation instructions

For detailed operation instructions for your product, refer to the documentation that accompanies your display.

All product documentation is available to download from the Raymarine website: www.raymarine.com/manuals.

Chapter 8: Maintenance

Chapter contents

- 8.1 Maintenance on page 88

8.1 Maintenance

Once a year:

1. Power-off the Radar.
2. Remove one of the antenna-securing bolts and associated washers.
3. Clean the bolt and washers.
4. Ensure that the passage to the "breather" from the side of the unit is clear of sealant or paint, or other obstacles. For more information on the "breather", refer to: 6.1 **Mounting pre-requisite: "breather" holes**
5. Replace the bolt and associated washers.
6. Repeat steps 1 to 5 for all antenna-securing bolts.
7. Tighten all antenna-securing bolts to a torque of 15 Nm (133 ft lbf).

Periodically, carry out these other maintenance tasks, with the Radar powered off:

- Ensure the antenna is firmly attached to the mounting surface.
- Check that any connected cables are in good condition and securely attached.
- Examine all cables for signs of chafing, cuts or other damage.

Warning: High voltages

This product may contain high voltages. Do NOT remove any covers or otherwise attempt to access internal components, unless specifically instructed in the documentation provided.

Unit cleaning instructions

The unit does not require regular cleaning. However, if you find it necessary to clean the unit, please follow the steps below:

1. Ensure power is switched off.
2. Wipe unit clean with a damp cloth.
3. If necessary, use a mild detergent solution to remove grease marks.

Chapter 9: Technical support

Chapter contents

- 9.1 Raymarine product support and servicing on page 90
- 9.2 Viewing product information on page 92

9.1 Raymarine product support and servicing

Raymarine provides a comprehensive product support service, as well as warranty, service, and repairs. You can access these services through the Raymarine website, telephone, and e-mail.

Product information

If you need to request service or support, please have the following information to hand:

- Product name.
- Product identity.
- Serial number.
- Software application version.
- System diagrams.

You can obtain this product information using the menus within your product.

Servicing and warranty

Raymarine offers dedicated service departments for warranty, service, and repairs.

Don't forget to visit the Raymarine website to register your product for extended warranty benefits: http://www.raymarine.co.uk/display/?id=788.

Region	Telephone	E-mail
United Kingdom (UK), EMEA, and Asia Pacific	+44 (0)1329 246 932	emea.service@raymarine.com
United States (US)	+1 (603) 324 7900	rm-usrepair@flir.com

Web support

Please visit the "Support" area of the Raymarine website for:

- **Manuals and Documents** — http://www.raymarine.com/manuals
- **FAQ / Knowledgebase** — http://www.raymarine.com/knowledgebase
- **Technical support forum** — http://forum.raymarine.com
- **Software updates** — http://www.raymarine.com/software

Telephone and e-mail support

Region	Telephone	E-mail
United Kingdom (UK), EMEA, and Asia Pacific	+44 (0)1329 246 777	support.uk@raymarine.com
United States (US)	+1 (603) 324 7900 (Toll-free: +800 539 5539)	support@raymarine.com
Australia and New Zealand	+61 2 8977 0300	aus.support@raymarine.com (Raymarine subsidiary)
France	+33 (0)1 46 49 72 30	support.fr@raymarine.com (Raymarine subsidiary)
Germany	+49 (0)40 237 808 0	support.de@raymarine.com (Raymarine subsidiary)
Italy	+39 02 9945 1001	support.it@raymarine.com (Raymarine subsidiary)
Spain	+34 96 2965 102	sat@azimut.es (Authorized Raymarine distributor)
Netherlands	+31 (0)26 3614 905	support.nl@raymarine.com (Raymarine subsidiary)
Sweden	+46 (0)317 633 670	support.se@raymarine.com (Raymarine subsidiary)
Finland	+358 (0)207 619 937	support.fi@raymarine.com (Raymarine subsidiary)

Region	Telephone	E-mail
Norway	+47 692 64 600	support.no@raymarine.com (Raymarine subsidiary)
Denmark	+45 437 164 64	support.dk@raymarine.com (Raymarine subsidiary)
Russia	+7 495 788 0508	info@mikstmarine.ru (Authorized Raymarine distributor)

9.2 Viewing product information

You can view information about your unit from the **Diagnostics** menu on a compatible multifunction display. This option displays information such as product serial number and software version.

With the Homescreen displayed:

1. Select **Set-up.**
2. Select **Maintenance**.
3. Select **Diagnostics**.
4. Select the **Select Device** option.
   A list of connected devices is displayed.
5. Select the product for which you want to view information. Alternatively, select **Show All Data** to display information for all connected products.

Chapter 10: Technical specification

Chapter contents

- 10.1 Technical specification on page 94

10.1 Technical specification

Approvals

Approvals:	**Certification:**
USA:	47CFR FCC Part 2 & Part 80 Certificate of Approval
Canada:	RSS238 Iss. 1 Technical Acceptance Certificate
European Union & EFTA:	Radio Equipment Directive 2014/53/EU Certificate of Opinion
Australia/New Zealand:	ACMA Declaration of Conformity Compliance level 3

General

Dimensions: Diameter: Height:	 541.0 mm 209.5 mm
Weight: Supply voltage:	5.6 kg Either 12 V dc or 24 V dc nominal Minimum: 10.8 V dc Maximum: 31.2 V dc
Power consumption:	Transmit mode (maximum): 17 W Standby mode: 7 W Sleep mode (applies only to radars connected via Wi-Fi): 2 W
Environmental: Waterproof to: Operating temperature range: Storage temperature range: Additional storage conditions: Humidity: Maximum wind speed:	 IPX6 -10°C to +55°C -25°C to +70°C Store upright; do not block vents on underside Up to 95% at 35°C 100 kts
Range scales:	1/16, 1/8, 1/4, 3/8, 1/2, 3/4, 1, 1.5, 2, 3, 4, 6, 8, 12, 16, and 24 nautical miles

Transmitter

Type:	X-band solid-state transmitter with pulse compression technology
Transmit frequency:	9354 MHz to 9446 MHz
Peak power output:	20 W
Duplexer:	Circulator
Pulse widths (3 dB):	40 ns to 14.7µs
Chirp lengths:	400 ns to 22 µs
Pulse repetition frequency:	2083 Hz to 4167 Hz
Chirp bandwidth:	Up to 32 MHz
Standby mode:	Scanner rotation - OFF Scanner transmission - OFF Wi-Fi link - ON

Receiver

IF bandwidth:	26 MHz
Noise figure:	Less than 4 dB

Antenna

Type:	Patch Array
Beamwidth (nominal)	Horizontal: 4.9° Vertical: 20°
Polarization:	Horizontal
Rotation speed:	24 rpm nominal

Chapter 11: Spares and accessories

Chapter contents

- 11.1 Quantum Radar accessories on page 98
- 11.2 Network hardware on page 99
- 11.3 Network cable connector types on page 100
- 11.4 RayNet to RayNet cables and connectors on page 101
- 11.5 RayNet to RJ45 adapter cables on page 102

11.1 Quantum Radar accessories

The following accessories are available for the Quantum™ Radar scanner:

Accessories

Item	Part number
10 m (32.8 ft.) Quantum™ power cable	A80309
15 m (49.2 ft.) Quantum™ power cable	A80369
5 m (16.4 ft.) Quantum™ data cable	A80274
10 m (32.8 ft.) Quantum™ data cable	A80275
15 m (49.2 ft.) Quantum™ data cable	A80310
25 m (82.0 ft.) Quantum™ data cable	A80311
Quantum™ Y-adapter cable	A80308
RayNet cable joiner	A80162

Note: For more information on additional RayNet cables and adapters, refer to the 11.4 **RayNet to RayNet cables and connectors** and 11.5 **RayNet to RJ45 adapter cables** sections.

11.2 Network hardware

Item	Part number	Notes
HS5 RayNet network switch 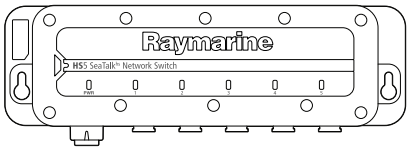	A80007	5–port switch for network connection of multiple devices featuring RayNet connectors. Equipment with RJ45 SeaTalk hs connectors can also be connected using suitable adapter cables.
RJ45 SeaTalk hs network switch 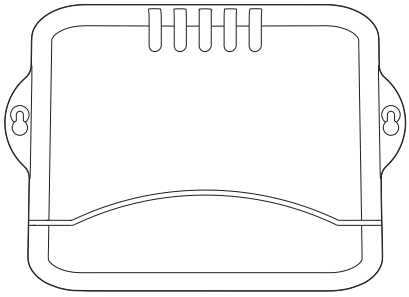	E55058	8–port switch for network connection of multiple SeaTalk hs devices featuring RJ45 connectors.
RJ45 SeaTalk hs crossover coupler 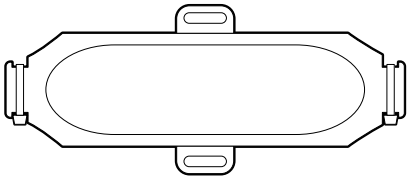	E55060	• Enables direct connection of RJ45 SeaTalk hs devices to smaller systems where a switch is not required. • Enables the connection of RJ45 SeaTalk hs devices to a HS5 RayNet network switch (in conjunction with suitable adapter cables). • Enables 2 RJ45 SeaTalk hs cables to be connected together to extend the length of the cabling. Recommended for internal installations. **Important:** Do NOT use crossover devices for POE (Power Over Ethernet) connections.
Ethernet RJ45 coupler 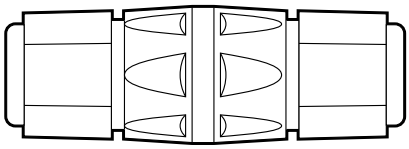	R32142	• Enables direct connection of RJ45 SeaTalk hs devices to smaller systems where a switch is not required. • Enables the connection of RJ45 SeaTalk hs devices to a HS5 RayNet network switch (in conjunction with suitable adapter cables). • Enables 2 RJ45 SeaTalk hs cables to be connected together to extend the length of the cabling. Recommended for external installations.

11.3 Network cable connector types

There are 2 types of network cable connector — RayNet, and RJ45 SeaTalk hs.

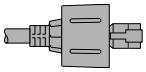	**RJ45 SeaTalk hs** connector.
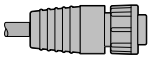	**RayNet** connector.

11.4 RayNet to RayNet cables and connectors

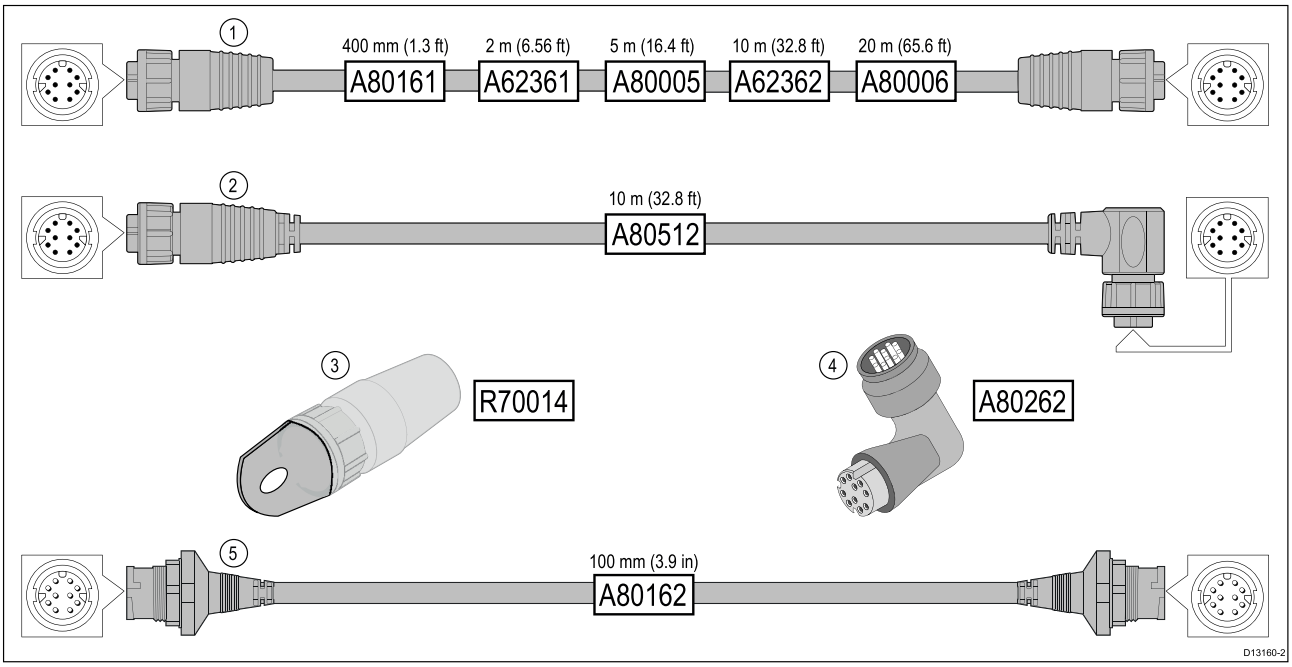

	Description	Typical use	Quantity
1	Standard RayNet connection cable with a RayNet (female) socket on both ends.	Suitable for connecting all RayNet equipment directly to LightHouse multifunction displays featuring a RayNet connector. Can also be used to connect RayNet equipment via a RayNet network switch (e.g. HS5).	1
2	Right-angle RayNet connection cable with a straight RayNet (female) socket on one end, and a right-angle RayNet (female) socket on the other end.	Suitable for connecting at 90° (right angle) to a device, for installations where space is limited. For example, use this cable to connect to a multifunction display when there is not enough space behind the display for the usual cable bend radius required by a standard RayNet cable.	1
3	RayNet cable puller (5 pack).	These “handles” securely attach to the twist-lock on RayNet cables, enabling you to pull the cables through conduits and other obstacles.	5
4	RayNet to RayNet right-angle coupler / adapter.	Suitable for connecting RayNet cables at 90° (right angle) to devices, for installations where space is limited. For example, use this adapter to connect a RayNet cable to a multifunction display when there is not enough space behind the display for the usual cable bend radius required by a standard RayNet cable. This adapter features a RayNet (female) socket at one end, and a RayNet (male) plug at the other end.	1
5	Adapter cable with a RayNet (male) plug on both ends.	Suitable for joining (female) RayNet cables together for longer cable runs.	1

11.5 RayNet to RJ45 adapter cables

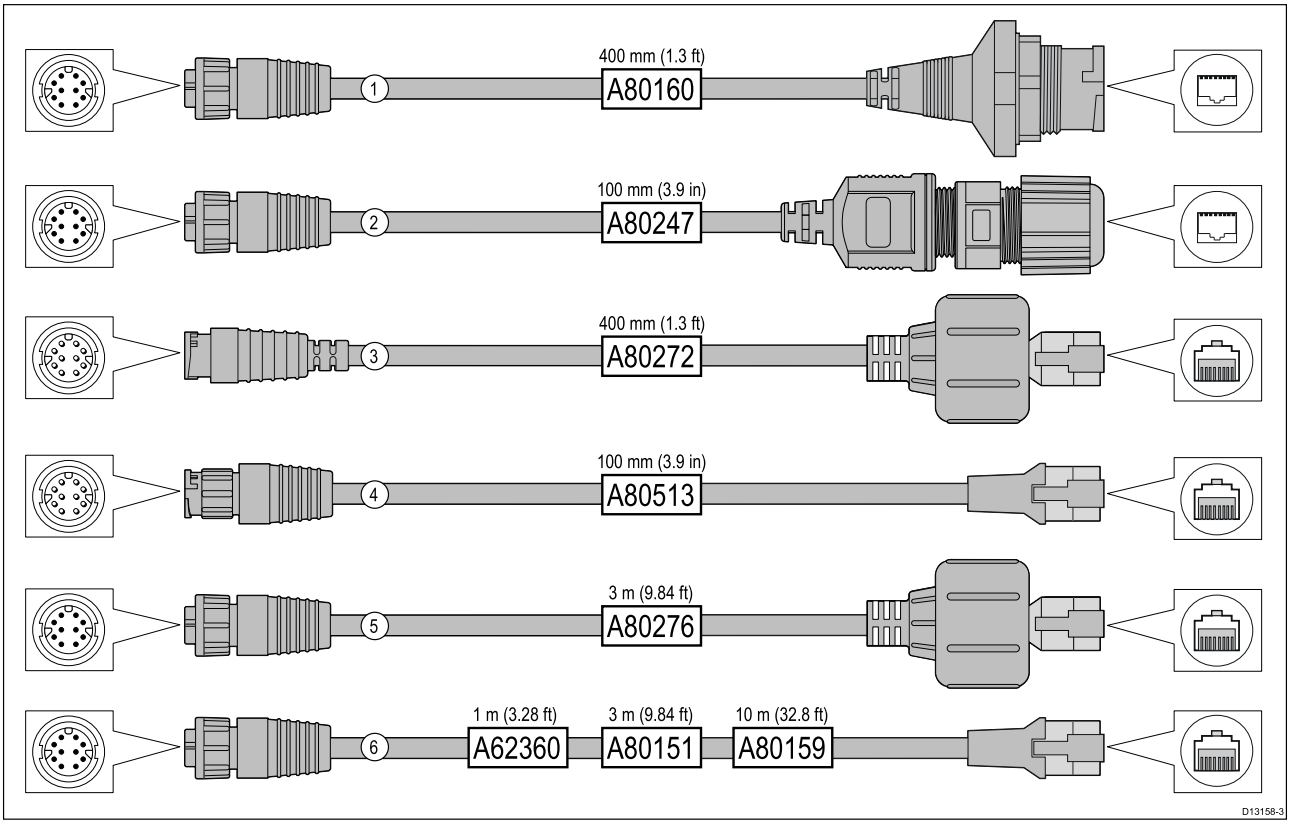

	Description	Typical use	Quantity
1	Adapter cable with a **RayNet** (female) socket on one end, and a waterproof (female) socket on the other end accepting the following cables with an **RJ45 SeaTalk hs** waterproof **locking** (male) plug: • **A62245** (1.5 m). • **A62246** (15 m).	A typical use for this adapter cable is to connect a **DSM300** sonar module to a **LightHouse** MFD, using all-waterproof cable connections. This adapter cable will also accept the following **RJ45 SeaTalk hs** cables, although the **RJ45** plug that connects at the equipment end (e.g. **DSM300**) will NOT be waterproof: • **E55049** (1.5 m). • **E55050** (5 m). • **E55051** (10 m). • **A62135** (15 m). • **E55052** (20 m).	1
2	Adapter cable with a **RayNet** (female) socket on one end, and a waterproof (female) **RJ45** socket on the other end, along with a locking gland for a watertight fit.	Directly connect a Raymarine radar scanner with an **RJ45 SeaTalk hs** (male) cable to a **RayNet** network switch (e.g. **HS5**) or **LightHouse** MFD.	1
3	Adapter cable with a **RayNet** (male) plug on one end, and an **RJ45 SeaTalk hs** waterproof (male) plug on the other end.	Connect a legacy **G-Series GPM-400**, **C-Series** Widescreen or **E-Series** Widescreen MFD to a Raymarine radar scanner supplied with a **RayNet** power / data cable.	1
4	Adapter cable with a **RayNet** (male) plug on one end, and an **RJ45 SeaTalk hs** (male) plug on the other end.	Connect a RayNet thermal camera to an Ethernet network switch with RJ45 ports.	1

	Description	Typical use	Quantity
5	Adapter cable with a **RayNet** (female) socket on one end, and an **RJ45 SeaTalk hs** waterproof (male) plug on the other end.	Connect a legacy **G-Series GPM-400**, **C-Series** Widescreen or **E-Series** Widescreen MFD to a **RayNet** network switch (e.g. the **HS5**).	1
6	Adapter cable with a **RayNet** (female) socket on one end, and an **RJ45 SeaTalk hs** (male) socket on the other end.	Connect a **LightHouse** MFD to a legacy **SR6** switch / weather receiver or a legacy 8–port **SeaTalk hs** network switch. Another common use for the cable is in conjunction with a crossover coupler (**E55060** or **R32142**) to connect Raymarine products with an **RJ45** connection (e.g. radar scanner, thermal camera or **DSM300**) to a **LightHouse** MFD or **RayNet** network switch (e.g. the **HS5**).	1

Index

A

Accessories 98
  Network adapter cables 102
  Network cables 101
  Network hardware 99
  RayNet cables 101
Auto acquisition
  Data source requirements 23, 81

C

Cable bend radius 43, 60
Cable protection 43, 60
Cable routing 43, 60
Cleaning 88
Compass safe distance 11
Compatible products 24
Connections
  Battery 53, 65
  Distribution panel 54, 66
  General cabling guidance 43, 60
  Network switch 57
  RayNet 56
  Wi-Fi 56
Contact details 90

D

Dimensions 29
Documentation
  Operation instructions 13, 23, 80, 86

E

Electromagnetic Compatibility 10
EMC, *See* Electromagnetic Compatibility

F

Fuse rating 52, 64

I

Installation
  Best practice 55, 67
  Checklist 22
  Mounting 71
  Multiple radar scanners 83
  Schematic diagram 22
  Tools required 26
  Wireless considerations 10, 33, 35
Interference 11
  See also Compass safe distance

L

Location requirements
  Wi-Fi 33
  Wireless 36

M

Maintenance 10
MARPA
  Data source requirements 23, 81

P

Parts supplied 18
Power
  Battery connection 53, 65
  Cable extension 52, 64
  Connection 52, 64
  Distribution 52, 64
  Distribution panel 54, 66
  Fuse and breaker ratings 52, 64
  Grounding 52, 55, 64, 67
  Sharing a breaker 54, 66
Power cable extension 55, 67
Product support 90

R

RayNet cables 101

S

Securing cables 43, 60
Service Center 90
Servicing 10
Software updates 25
Strain relief, *See* Cable protection

T

Technical specification 93
Technical support 90
Thermal breaker rating 52, 64
Troubleshooting 82

U

Upgrading, *See* Software updates

W

Warranty 90
WEEE Directive 11
What's in the box 18
Wireless
  Interference 36

Raymarine
Marine House, Cartwright Drive, Fareham, Hampshire.
PO15 5RJ. United Kingdom.

Tel: +44 (0)1329 246 700

www.raymarine.com

a brand by FLIR