ULTERRA QUICK START UP GUIDE

GETTING STARTED

POWER ON

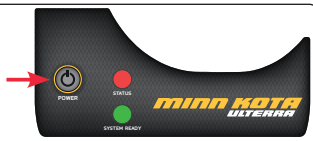

The Ulterra Trolling Motor must be powered "on" manually. **The remote will not turn the motor on.** The power button is located on the base of the motor. Pressing the power button will turn on Ulterra. The red STATUS light and the green SYSTEM READY light will both be illuminated when powered on.

POWER OFF

To power off Ulterra, press and hold the POWER button approximately three seconds, until the green light turns off. Ulterra has an auto-shut off as well. It will automatically power off after 1.5 hours of inactivity in the stowed position.

STATUS LIGHT

STATUS

The red STATUS light indicates:

- SOLID: Motor is stowed
- FLASHING: Motor is stowing/deploying
- OFF: Motor is deployed or off

SYSTEM READY LIGHT

SYSTEM READY

The green SYSTEM READY light will remain lit while Ulterra is operating. If the green light does not remain illuminated after power up, this is an indicator of insufficient voltage/power.

UPDATE YOUR SOFTWARE:

If you have Ulterra with i-Pilot Link, make sure that you have the latest i-Pilot Link and Humminbird software installed. Simply go to Humminbird.com, click on My Humminbird, and register your products using the Link serial number format P###UM##### to have access to all software downloads.

WARNING:

When the motor is powered off while off the ramps, never turn the lower unit of the motor manually (by hand). This will affect the alignment of the motor and cause it to stow improperly.

MOTOR CONTROL

Ulterra functions can be controlled by two different methods: the i-Pilot / i-Pilot Link wireless remote or the foot pedal. For wireless remote functions, please refer to the remote Quick Reference Guide.

FOOT PEDAL FUNCTIONS

The foot pedal has dual mode operation: **Normal Mode** and **Ulterra Mode**.

NORMAL MODE

When in normal mode, the foot pedal controls Speed, Steering, Prop on/off, Spot-Lock, and AutoPilot. When in Normal mode the yellow light will NOT be illuminated.

ULTERRA MODE

To activate Ulterra mode, press the "Mode" button, above the speed dial on the foot pedal. The yellow MODE light will illuminate. When in Ulterra mode, the foot pedal controls Stow, Deploy, and Trim, as well as Spot-Lock and Auto Pilot.

GUIDE DE DÉMARRAGE RAPIDE ULTERRA

DÉMARRAGE

MISE EN MARCHE

Le moteur de pêche à la traîne Ulterra doit être mis en « on » (marche) manuellement. Le bouton de mise en marche est situé à la base du moteur. Appuyer sur le bouton de mise en marche allumera Ulterra. Les feux rouges et verts DEL s'allumera lors de la mise en marche.

ARRÊT

Pour arrêter Ulterra, appuyez et tenez le bouton de mise en marche jusqu'à ce que le voyant vert s'éteigne. Ulterra a aussi un arrêt automatique. Il s'arrêtera automatiquement après 1,5 heure d'inactivité en position d'arrimage.

VOYANT D'ÉTAT

STATUS

Le voyant d'ÉTAT rouge indique:

- FIXE : Le moteur est arrimé
- CLIGNOTANT : Le moteur est en cours d'arrimage/de déploiement
- ÉTEINT : Le moteur est déployé ou éteint

VOYANT SYSTÈME PRÊT

SYSTEM READY

Le voyant SYSTÈME PRÊT restera allumé jusqu'à ce que l'Ulterra fonctionne. Si le voyant vert s'éteint après le démarrage, cela signifie que la tension/l'alimentation est insuffisante.

MISE À JOUR DE VOTRE LOGICIEL :

Si vous avez Ulterra muni d'i-Pilot Link, assurez-vous que vous avez la plus récente version des logiciels i-Pilot Link et Humminbird. Allez simplement à myhumminbird.com et inscrivez vos produits en utilisant le format de numéro de série P###UM##### afin d'accéder tous les téléchargements de logiciel.

AVERTISSEMENT :

Avertissement : Ne jamais éteindre l'unité inférieure manuellement (à la main) lorsque le moteur est éteint et hors rampe. Cela affectera l'alignement du moteur et entraînera un arrimage inapproprié.

CONTRÔLE DU MOTEUR

Les fonctions d'Ulterra peuvent être contrôlées par deux moyens différents : la télécommande sans fil i-Pilot/i-Pilot Link ou la pédale. Pour les fonctions par télécommande sans fil, veuillez consulter le Guide de référence rapide de la télécommande

FONCTIONS DE LA PÉDALE

La pédale a un fonctionnement à deux modes : **Mode normal** et **mode Ulterra**.

MODE NORMAL

En mode normal, la pédale contrôle la vitesse, le gouvernail, la marche/l'arrêt de l'hélice, le Spot Lock et le pilote automatique. En mode normal, le voyant jaune DEL ne sera PAS allumé.

MODE ULTERRA

Pour activer le mode Ulterra, appuyez sur le bouton « Mode », qui est au-dessus du cadran de vitesse sur la pédale. Le voyant jaune DEL sera allumé. En mode Ulterra, la pédale contrôle l'arrimage, le déploiement et la compensation, ainsi que le Spot Lock et le pilote automatique.

ULTERRA™

BOW-MOUNT TROLLING MOTOR

OWNER'S MANUAL

INTRODUCTION

THANK YOU

Thank you for choosing Minn Kota. We believe that you should spend more time fishing and less time positioning your boat. That's why we build the smartest, toughest, most intuitive trolling motors on the water. Every aspect of a Minn Kota trolling motor is thought out and rethought until it's good enough to bear our name. Countless hours of research and testing provide you the Minn Kota advantage that can truly take you "Anywhere. Anytime." We don't believe in shortcuts. We are Minn Kota. And we are never done helping you catch more fish.

REGISTRATION

Remember to keep your receipt and immediately register your trolling motor. A registration card is included with your motor or you can complete registration on our website at minnkotamotors.com.

SERIAL NUMBER

Your Minn Kota 11-character serial number is very important. It helps to determine the specific model and year of manufacture. When contacting Consumer Service or registering your product, you will need to know your product's serial number. We recommend that you write the serial number down so that you have it available for future reference.

NOTE: The serial number on your Ulterra is located inside the mount near the motor rests.

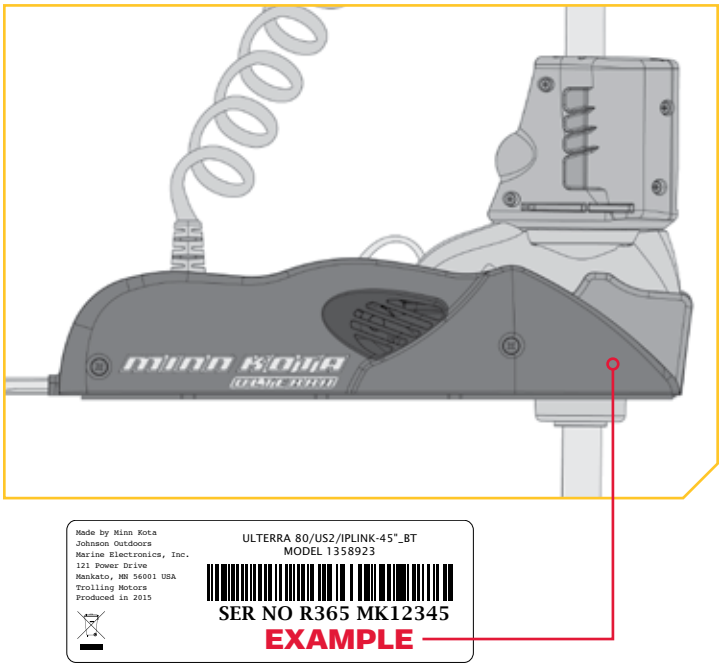

MOTOR INFORMATION (FOR CUSTOMER REFERENCE ONLY)

Model: _____

Serial Number: _____

Purchase Date: _____

Store Where Purchased: _____

NOTE: Do not return your Minn Kota motor to your retailer. Your retailer is not authorized to repair or replace this unit. You may obtain service by: calling Minn Kota at (800) 227-6433; returning your motor to the Minn Kota Factory Service Center; sending or taking your motor to any Minn Kota authorized service center. A list of authorized service centers is available on our website, at minnkotamotors.com. Please include proof of purchase, serial number and purchase date for warranty service with any of the above options.

TABLE OF CONTENTS

TABLE OF CONTENTS

SAFETY CONSIDERATIONS

Please thoroughly read the user manual. Follow all instructions and heed all safety and cautionary notices. Use of this motor is only permitted for persons that have read and understood these user instructions. Minors may use this motor only under adult supervision.

⚠ WARNING

You are responsible for the safe and prudent operation of your vessel. We have designed your Minn Kota product to be an accurate and reliable tool that will enhance boat operation and improve your ability to catch fish. This product does not relieve you from the responsibility for safe operation of your boat. You must avoid hazards to navigation and always maintain a permanent watch so you can respond to situations as they develop. You must always be prepared to regain manual control of your boat. Learn to operate your Minn Kota product in an area free from hazards and obstacles.

⚠ WARNING

Never run the motor out of the water, as this may result in injuries from the rotating propeller. The motor should be disconnected from the power source when it is not in use or is off the water. When connecting the power-supply cables of the motor to the battery, ensure that they are not kinked or subject to chafe and route them in such a way that persons cannot trip over them. Before using the motor make sure that the insulation of the power cables is not damaged. Disregarding these safety precautions may result in electric shorts of battery(s) and/or motor. Always disconnect motor from battery(s) before cleaning or checking the propeller. Avoid submerging the complete motor as water may enter the lower unit through control head and shaft. If the motor is used while water is present in the lower unit considerable damage to the motor can occur. This damage will not be covered by warranty.

⚠ WARNING

Take care that neither you nor other persons approach the turning propeller too closely, neither with body parts nor with objects. The motor is powerful and may endanger or injure you or others. While the motor is running watch out for persons swimming and for floating objects. Persons whose ability to run the motor or whose reactions are impaired by alcohol, drugs, medication, or other substances are not permitted to use this motor. This motor is not suitable for use in strong currents. The constant noise pressure level of the motor during use is less than 70dB(A). The overall vibration level does not exceed 2,5 m/sec2.

⚠ WARNING

When stowing or deploying the motor, keep fingers clear of all hinge and pivot points and all moving parts. In the event of unexpected operation, remove power leads from the battery.

⚠ WARNING

It is recommended to only use Johnson Outdoors approved accessories with your Minn Kota motor. Using non-approved accessories including to mount or control your motor may cause damage, unexpected motor operation and injury. Be sure to use the product and approved accessories, including remotes, safely and in the manner directed to avoid accidental or unexpected motor operation. Keep all factory installed parts in place including motor and accessory covers, enclosures and guards.

WARRANTY

WARRANTY ON MINN KOTA FRESHWATER TROLLING MOTORS

Johnson Outdoors Marine Electronics, Inc. ("JOME") extends the following limited warranty to the original retail purchaser only. Warranty coverage is not transferable.

Minn Kota Limited Two-Year Warranty on the Entire Product

JOME warrants to the original retail purchaser only that the purchaser's new Minn Kota freshwater trolling motor will be materially free from defects in materials and workmanship appearing within two (2) years after the date of purchase. JOME will (at its option) either repair or replace, free of charge, any parts found by JOME to be defective during the term of this warranty. Such repair, or replacement shall be the sole and exclusive liability of JOME and the sole and exclusive remedy of the purchaser for breach of this warranty.

Minn Kota Limited Lifetime Warranty on Composite Shaft

JOME warrants to the original retail purchaser only that the composite shaft of the purchaser's Minn Kota trolling motor will be materially free from defects in materials and workmanship appearing within the original purchaser's lifetime. JOME will provide a new composite shaft, free of charge, to replace any composite shaft found by JOME to be defective during the term of this warranty. Providing a new composite shaft shall be the sole and exclusive liability of JOME and the sole and exclusive remedy of the purchaser for breach of this warranty; **and purchaser shall be responsible for installing, or for the cost of labor to install, any new composite shaft provided by JOME.**

Exclusions & Limitations

This limited warranty does not apply to products that have been used in saltwater or brackish water, commercially or for rental purposes. This limited warranty does not cover normal wear and tear, blemishes that do not affect the operation of the product, or damage caused by accidents, abuse, alteration, modification, shipping damages, negligence of the user or misuse, improper or insufficient care or maintenance. **DAMAGE CAUSED BY THE USE OF OTHER REPLACEMENT PARTS NOT MEETING THE DESIGN SPECIFICATIONS OF THE ORIGINAL PARTS WILL NOT BE COVERED BY THIS LIMITED WARRANTY.** The cost of normal maintenance or replacement parts which are not in breach of the limited warranty are the responsibility of the purchaser. Prior to using products, the purchaser shall determine the suitability of the products for the intended use and assumes all related risk and liability. Any assistance JOME provides to or procures for the purchaser outside the terms, limitations or exclusions of this limited warranty will not constitute a waiver of the terms, limitations or exclusions, nor will such assistance extend or revive the warranty. JOME will not reimburse the purchaser for any expenses incurred by the purchaser in repairing, correcting or replacing any defective products or parts, except those incurred with JOME's prior written permission. **JOME'S AGGREGATE LIABILITY WITH RESPECT TO COVERED PRODUCTS IS LIMITED TO AN AMOUNT EQUAL TO THE PURCHASER'S ORIGINAL PURCHASE PRICE PAID FOR SUCH PRODUCT.**

Minn Kota Service Information

To obtain warranty service in the U.S., the product believed to be defective, and proof of original purchase (including the date of purchase), must be presented to a Minn Kota Authorized Service Center or to Minn Kota's factory service center in Mankato, MN. Any charges incurred for service calls, transportation or shipping/freight to/from the Minn Kota Authorized Service Center or factory, labor to haul out, remove, re-install or re-rig products removed for warranty service, or any other similar items are the sole and exclusive responsibility of the purchaser. Products purchased outside of the U.S. must be returned prepaid with proof of purchase (including the date of purchase and serial number) to any Authorized Minn Kota Service Center in the country of purchase. Warranty service can be arranged by contacting a Minn Kota Authorized Service Center or by contacting the factory at 1-800-227-6433 or email service@minnkotamotors.com. **Products repaired or replaced will be warranted for the remainder of the original warranty period [or for 90 days from the date of repair or replacement, whichever is longer]. For any product that is returned for warranty service that JOME finds to be not covered by or not in breach of this limited warranty, there will be a billing for services rendered at the prevailing posted labor rate and for a minimum of at least one hour.**

NOTE: Do not return your Minn Kota product to your retailer. Your retailer is not authorized to repair or replace products.

NOTE: THERE ARE NO EXPRESS WARRANTIES OTHER THAN THESE LIMITED WARRANTIES. IN NO EVENT SHALL ANY IMPLIED WARRANTIES INCLUDING ANY IMPLIED WARRANTIES OF MERCHANTABILITY OR FITNESS FOR PARTICULAR PURPOSE, EXTEND BEYOND THE DURATION OF THE RELEVANT EXPRESS LIMITED WARRANTY. IN NO EVENT SHALL JOME BE LIABLE FOR PUNITIVE, INDIRECT, INCIDENTAL, CONSEQUENTIAL OR SPECIAL DAMAGES. Without limiting the foregoing, JOME assumes no responsibility for loss of use of product, loss of time, inconvenience or other damage.

Some states do not allow limitations on how long an implied warranty lasts or the exclusion or limitation of incidental or consequential damages, so the above limitations and/or exclusions may not apply to you. This warranty gives you specific legal rights and you may also have other legal rights which vary from state to state.

KNOW YOUR BOAT

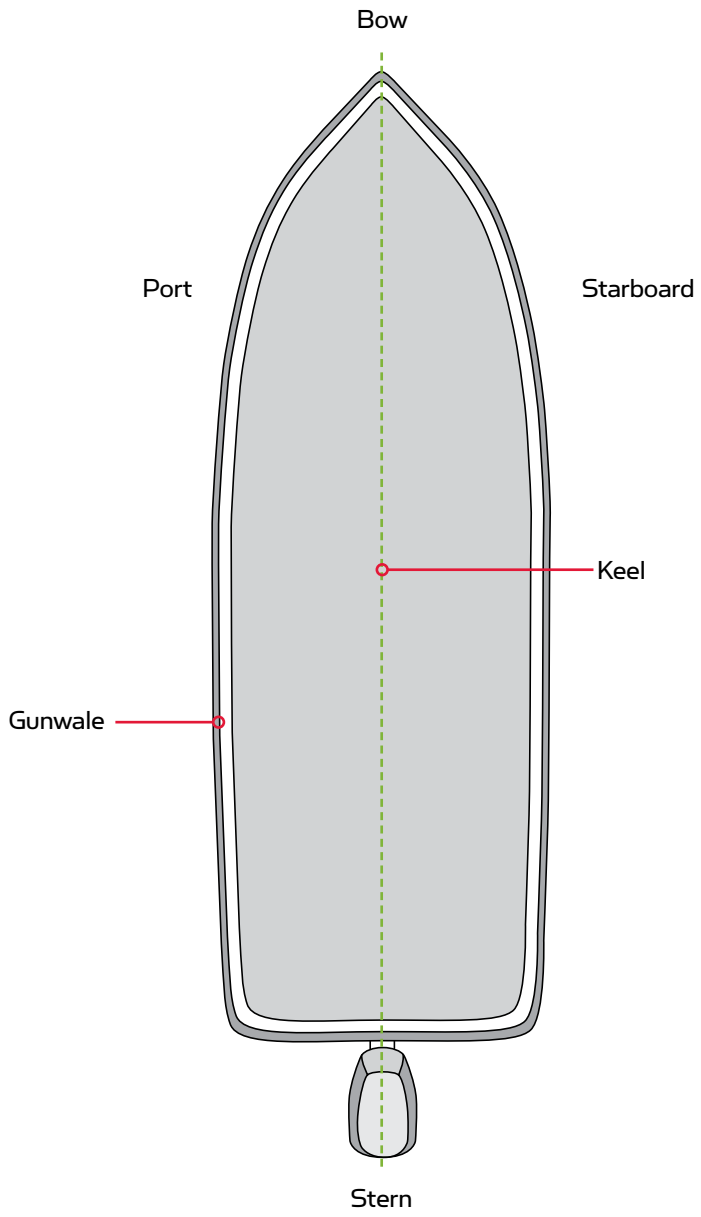

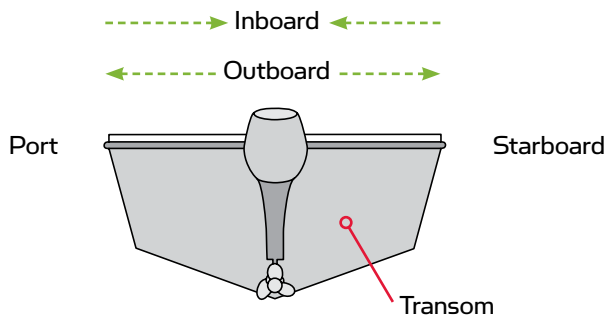

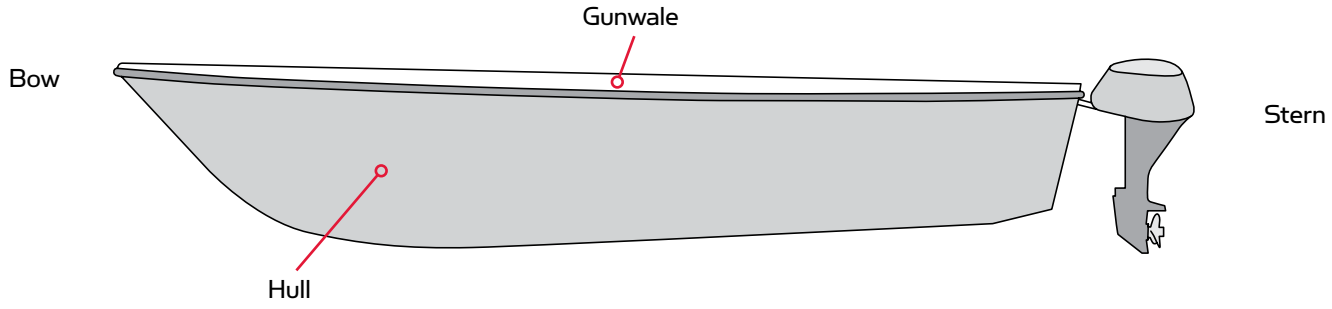

FEATURES

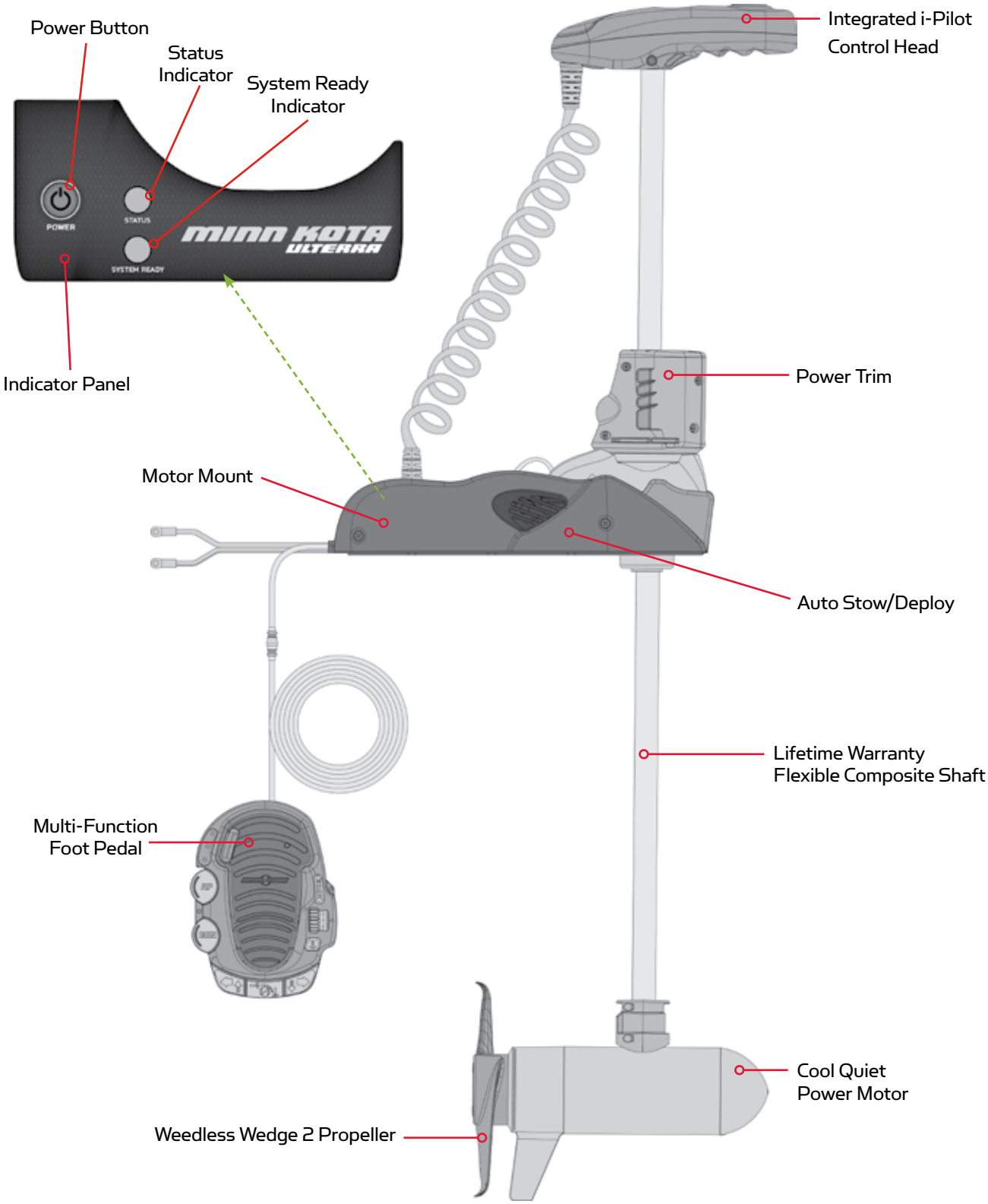

NOTE: Specifications subject to change without notice. This diagram is for reference only and may differ from your actual motor.

INSTALLATION

INSTALLING THE ULTERRA

Your new Ulterra comes with everything you'll need to directly install it to the boat. This motor can be directly mounted to the boat or it may be coupled with a Minn Kota quick release bracket for ease of mounting and removal. For installation with a quick release bracket, refer to the installation instructions provided with the bracket. For compatible quick release mounting bracket, please visit minnkotamotors.com. To install the motor directly to the boat, please follow the instructions provided in this manual. Please review the parts list, mounting considerations and tools needed for installation prior to getting started. For additional product support and to locate your nearest dealer, please visit minnkotamotors.com.

INSTALLATION PARTS LIST

Item / Assembly	Part #	Description	Qty.
1	✖	MOTOR ASSEMBLY	1
AA	2994859	BAG ASY-TERROVA/V2,RUB.BUMPERS	1
2	2325110	PAD, FOOTPEDAL	5
BB	2994917	BAG ASSY, ULTERRA MTG HARDWARE	1
3	2203430	SCREW-1/4-20 X 2.0 HHCS SS	6
4	2203431	SCREW-1/4-20 X 0.5 HHCS SS	6
5	2201725	WASHER-CLIPPED, 1/4", 1.00" OD	6
6	2261713	WASHER-1/4 FLAT 18-8 SS	6
7	2263103	NUT-1/4-20 NYLOCK SS	6
8	2301720	WASHER-MOUNTING - RUBBER	6
9	2203800	STRAP, HOLD DOWN	1
10	2994075 ♦	REMOTE ASSEMBLY, IPILOT	1
11	2994076 ♦	REMOTE ASSEMBLY LINK TOUCHSCREEN	1
▲	2397101 ♦	MANUAL, QUICK REF., iPILOT 1.6	1
▲	2397103 ♦	MANUAL-QUICK REF., iPILOT 3.0	1
12	2390800 ♦	LANYARD, REMOTE W/ CARABINER	1
13	2373241 ♦	CABLE, USB REMOTE CHARGER LINK	1
14	2375901 ♦	ADAPTER, USB DC POWER LINK	1
15	2996400 ♦	HEADING SENSOR ASSEMBLY	1
16	490389-1 ♦	CABLE, ETH (M12-M-M12-F, 30'	1
17	2211415	CABLE-EXTENSION, PD/AP 110"	1
CC	1378132	80# THRUST PROP KIT	1
DD	1378160	112# THRUST PROP KIT	1
18	2262658	PIN-DRIVE 1" X 3/16" S/S	1
19	2091701	WASHER-PROP (LARGE) MAX101	1
20	2093101	NUT-PROP,NYLOC,LG,MX101 3/8 SS	1
21	2331160	PROP-WW2 (4") w/ADP.RING	1
	2341160	PROP-WW2 (4.5) w/ADP.RING	1
▲	2207113	MANUAL, INSTALL GUIDE, ULTERRA	1
22	2994740	FOOT PEDAL ASSY, ULTERRA	1

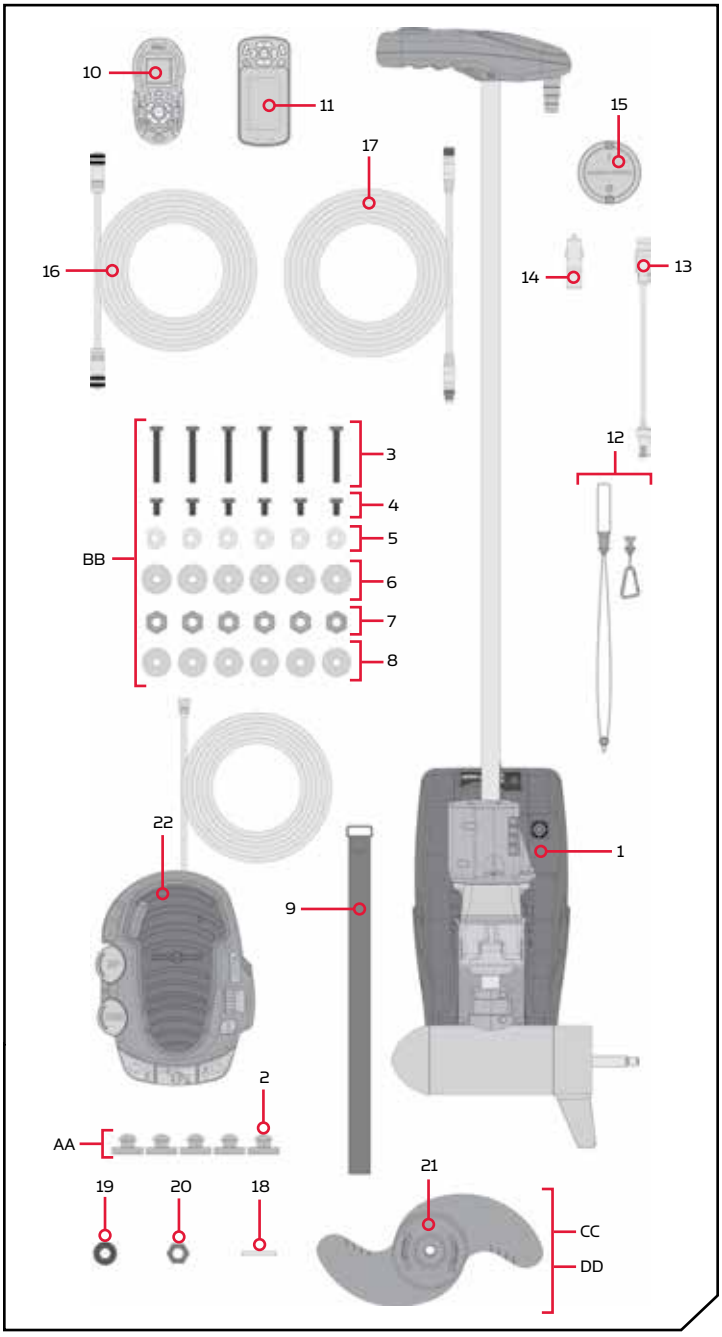

▲ Not shown on Parts Diagram.
✖ This part is included in an assembly and cannot be ordered individually.
♦ Only available with models factory installed with i-Pilot or i-Pilot Link.

MOUNTING CONSIDERATIONS

It is recommended that the motor be mounted as close to the keel or centerline of the boat as possible. Make sure the area under the mounting location is clear to drill holes and install nuts and washers. Make sure the motor rest is positioned far enough beyond the edge of the boat. The motor must not encounter any obstructions as it is lowered into the water or raised into the boat when stowed and deployed. Consider a quick release or adapter bracket with the installation of your motor. To view a list of accessories, please visit minnkotamotors.com.

View accessories available for your trolling motor at minnkotamotors.com.

TOOLS AND RESOURCES REQUIRED

- #2 Phillips Screwdriver
- #3 Phillips Screwdriver
- Drill
- 9/32" Drill Bit
- A person to help with installation

INSTALLATION

Installing the Ulterra

1

a. Place the Motor on an elevated, level surface such as a workbench or the tailgate of a pickup. The motor, as removed from the box, should be in the stowed position.

b. Remove the four sideplate screws using a #3 or #2 Phillips screwdriver. Two of these screws will be located on each side of the Motor Mount.

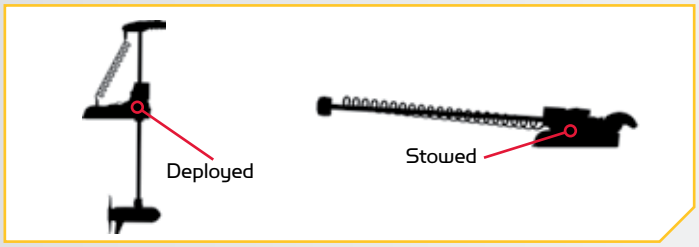

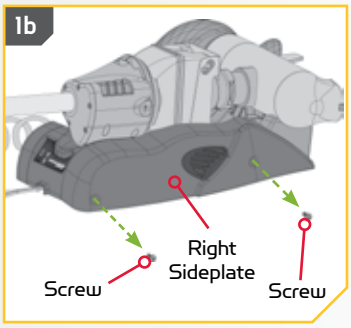

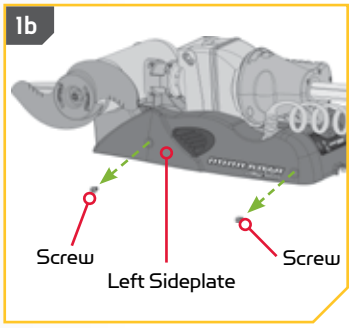

NOTE: This motor weighs approximately 70 lbs. We recommend having a second person help with the installation.

2

c. Remove the Right Sideplate to access the Mounting Slots.

d. Remove the Left Sideplate to access the Mounting Holes.

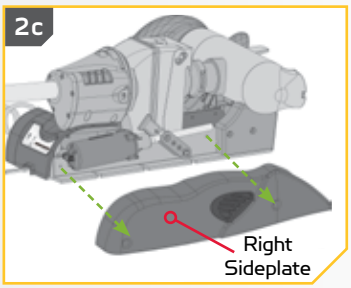

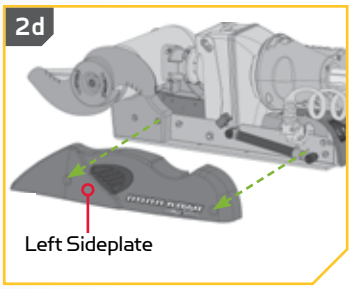

3

e. Under the Left Sideplate, the Extension Damper obstructs access to the left front Mounting Hole.

f. Using a small Screw Driver, remove the two 5/16" E-clips holding the Extension Damper in place. Once the E-clips are removed, slide the Extension Damper off the Damper Pins to expose the left rear Mounting Hole. Set the two E-clips and Extension Damper in a safe place so they are not misplaced before they are reassembled later in the installation.

⚠ WARNING

Do not deploy the motor until it is fully mounted to the boat. Illustrations are for reference only. Deploying your motor before it is mounted to the boat may cause injury.

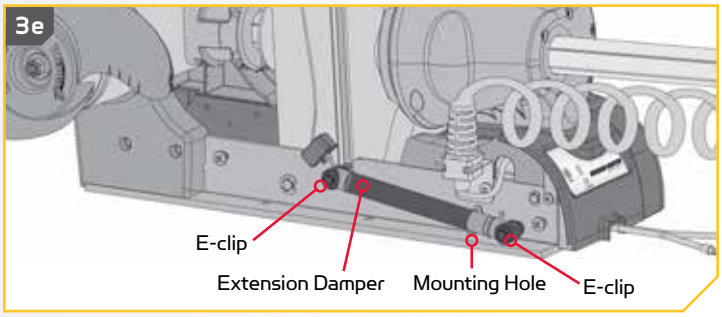

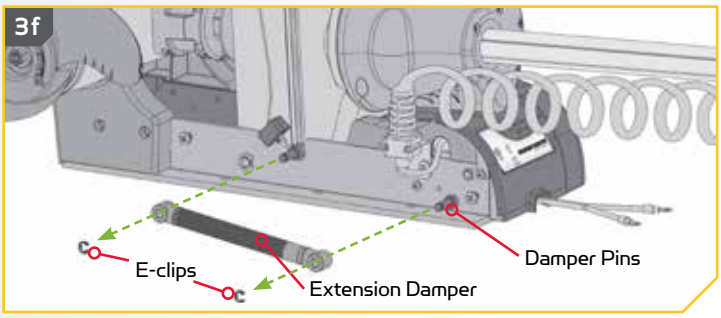

4

g. Make sure the Power Cables from the battery are disconnected, or that the breaker, if equipped, is “off”.

⚠ WARNING

Make sure the motor is mounted on a level surface and is not connected to a power source.

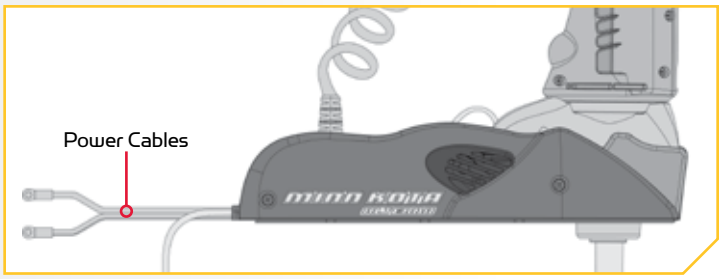

5

h. Place the motor on the bow of the boat. Place the motor as close to the centerline or keel of the boat as possible. The motor can be installed on either the Port or Starboard side of the boat based on personal preference. Reviewing the mounting considerations at the beginning of the installation section.

NOTE: The Emergency Strap (Item #9) is used for Manually Stowing the Ulterra. The Emergency Strap is not secured during installation. Store it on your boat in the event that you would need to manually stow the motor. To learn how, please refer to the "Manually Stowing the Ulterra" section of the Owner's Manual.

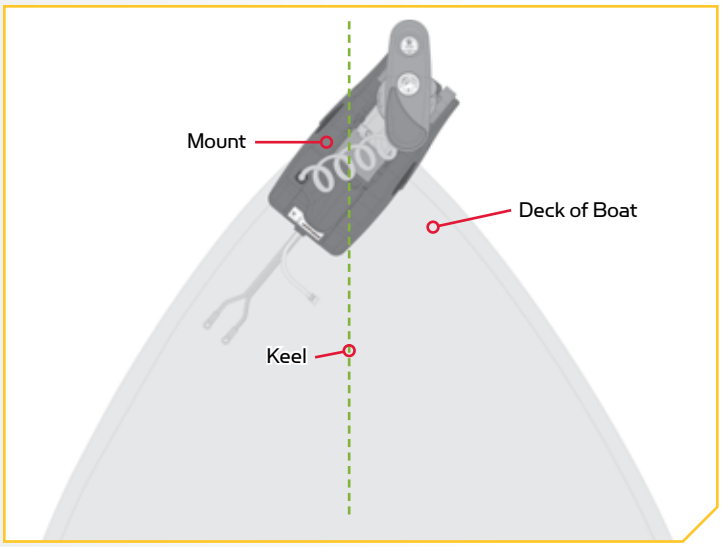

6

ITEM(S) NEEDED

#8 x 6

⚠ WARNING

Do not deploy the motor until it is fully mounted to the boat. Illustrations are for reference only. Deploying your motor before it is mounted to the boat may cause injury.

i. Make sure the slot on the underside of the Base Extrusion is aligned with the outermost part of the gunwale of the boat. This will ensure that the Shaft has a minimum clearance of 1-1/2" when it is deployed. The lower unit when stowed and deployed must not encounter any obstructions.

j. Check to be sure that the Motor Mount is level. Use the Rubber Washers (Item #8) provided to create a level surface if necessary.

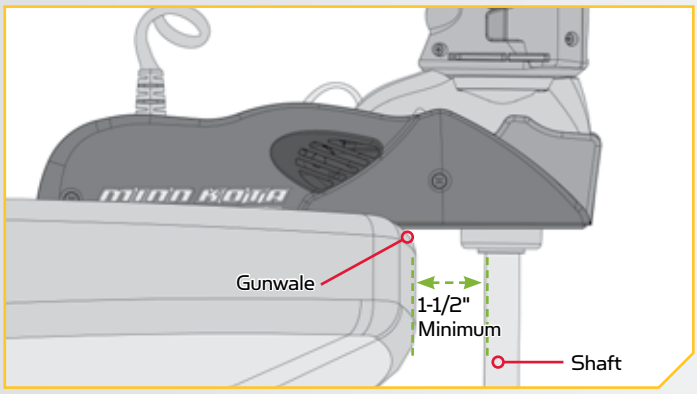

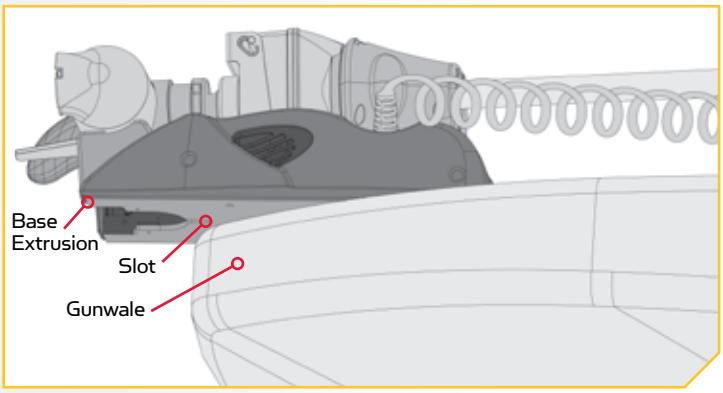

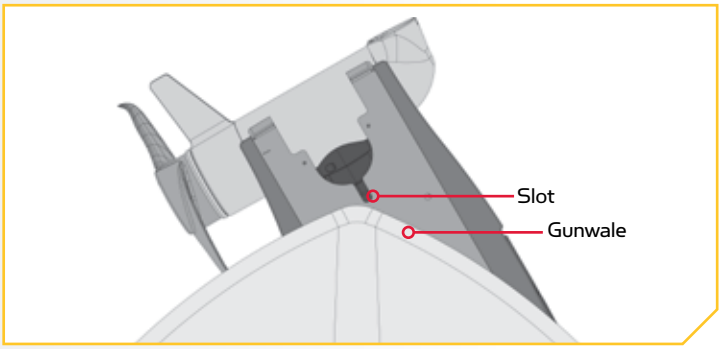

7

k. It is recommended to mark at least 4 of the 6 holes in the Base Extrusion to have a minimum of two bolts on each side that are located the farthest apart. Ideal installation would allow for 6 bolts to be used, with a minimum of 4.

l. Make sure the area under the mounting location is clear to drill holes and install nuts and washers. Drill through the marked holes using a 9/32" drill bit.

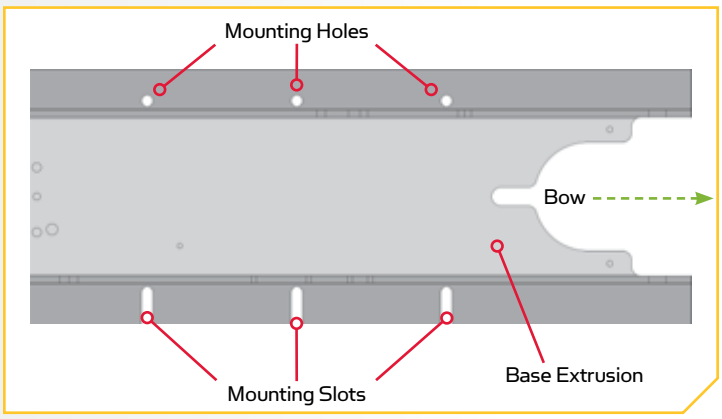

8

m. Mount the motor to the boat using the provided hardware. Place the installation hardware for the side of the Motor where the Power Tilt is located first. This is the opposite side of the Base Extrusion from where the Extension Damper was removed. The base of the Motor where the Power Tilt is located has Mounting Slots and the side where the Extension Damper is located has Mounting Holes.

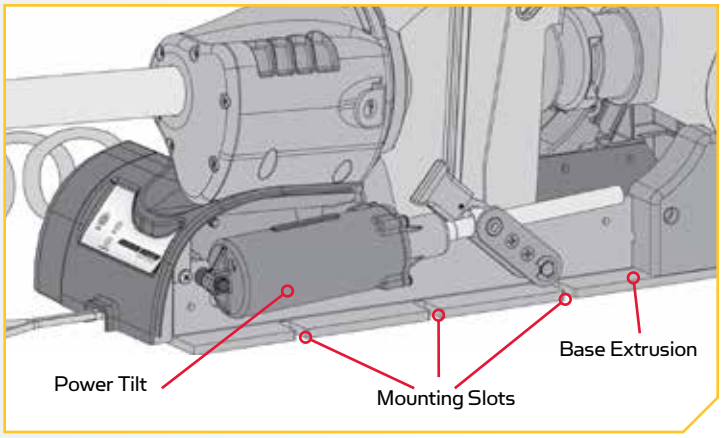

9

ITEM(S) NEEDED


#3 x 3


#6 x 3

#5 x 3


#7 x 3


#4 x 3

NOTE: To prevent seizing of the stainless steel hardware, do not use high speed installation tools. Wetting the screws or applying an anti-seize may help prevent seizing.

n. **If installing with a Quick Release Bracket,** install the motor with the Hex Head Bolts (Item #4) and Clipped Washers (Item #5). Orientate the Clipped Washers so that the flat side of the washer is towards the Base Extrusion. The Bolt should pass through the Clipped Washer and into a Quick Release Bracket. Leave at least 1/4" space between the Hex Head Bolt and Clipped Washer in order to slide the Base Extrusion under the Clipped Washer and into place.

NOTE: The Long Bolts, Flat Washers and Nylock Nut are not used when installing the Ulterra with a Quick Release Bracket.

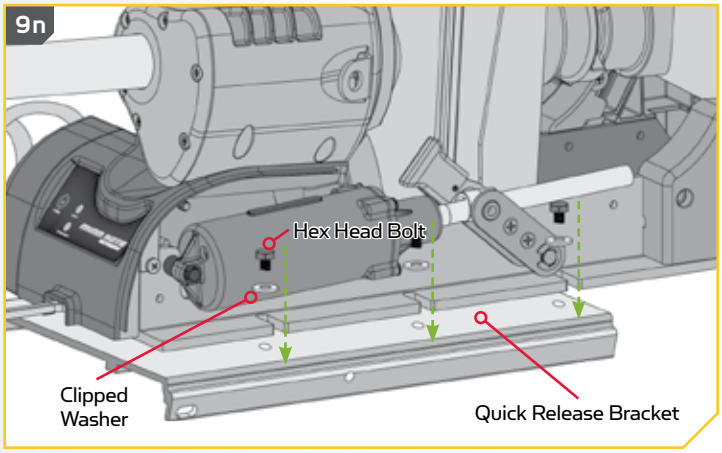

⚠ CAUTION

Use extra care to avoid pinching and damaging the sensor wires that run along side of the Base Extrusion when installing and tightening the motor mounting bolts.

10

o. If installing directly to the boat deck, install the motor with the Long Bolts (Item #3), Clipped Washer (Item #5), Flat Washer (Item #6) and Nylock Nut (Item #7). Orientate the Clipped Washers so that the flat side of the washer is towards the Base Extrusion. The Bolt should pass through the Clipped Washer, the Rubber Washer and then through the Boat Deck. The Bolt should be secured by first adding the Flat Washer (Item #6) to the Bolt and securing with a Nylock Nut (Item #7). Leave at least 1/4" space between the Hex Head Bolt and Clipped Washer and the deck of the boat. This will leave enough space to slide the Base Extrusion between the Clipped Washer and Rubber Washer and into place.

NOTE: The Short Bolts are not used when installing the Ulterra directly to the boat.

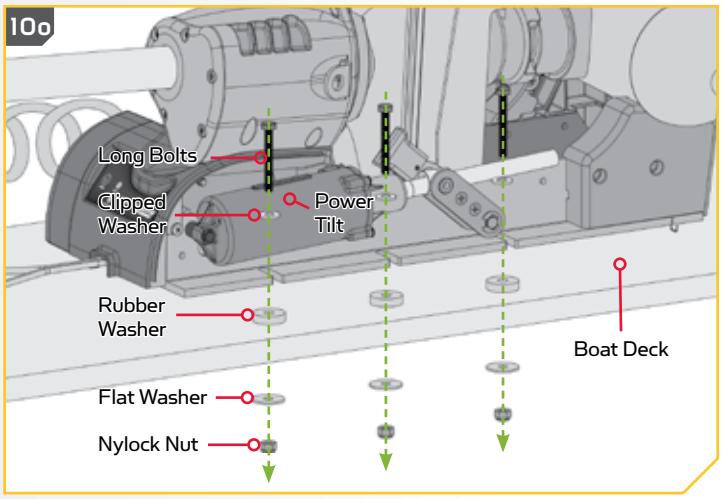

11

p. Slide the Base Extrusion into place under the Bolts that were just installed.

q. If installing with a Quick Release Bracket, the Base Extrusion should slide between the Quick Release Bracket and the Clipped Washers. Hold the Clipped Washers up on the Hex Head Bolt, so the Clipped Washer will sit on top of the Base Extrusion.

r. If installing directly to the boat deck, the Base Extrusion should slide between the Clipped Washer and the Rubber Washer. Hold the Clipped Washers up on the Long Bolt, so the Clipped Washer will sit on top of the Base Extrusion.

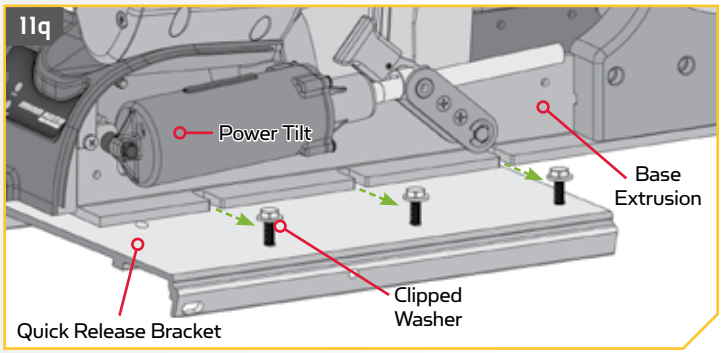

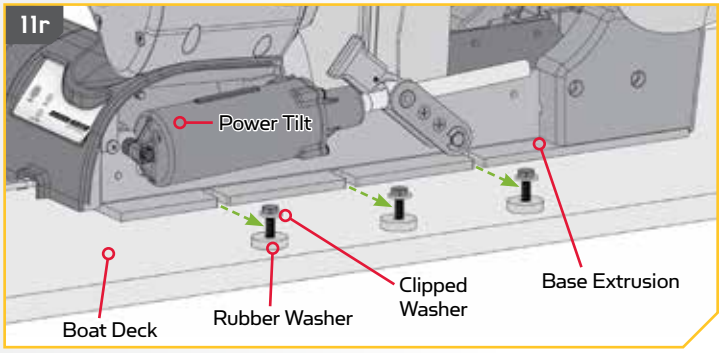

12

ITEM(S) NEEDED

#3 x 3 | #6 x 3 | #5 x 3 | #7 x 3 | #4 x 3

NOTE: To prevent seizing of the stainless steel hardware, do not use high speed installation tools. Wetting the screws or applying an anti-seize may help prevent seizing.

s. Place the hardware on the Damper side of the mount into the Mounting Holes to secure the Base Extrusion.

t. **If installing with a Quick Release Bracket,** install the motor with the Hex Head Bolts (Item #4) and Clipped Washers (Item #5). Orientate the Clipped Washers so that the flat side of the washer is towards the Base Extrusion. The Bolt should pass through the Clipped Washer, Base Extrusion and into a Quick Release Bracket.

NOTE: The Long Bolts, Flat Washers and Nylock Nut are not used when installing the Ulterra with a Quick Release Bracket.

u. **If installing directly to the boat deck,** install the motor with the Long Bolts (Item #3), Clipped Washer (Item #5), Flat Washer (Item #6) and Nylock Nut (Item #7). Orientate the Clipped Washers so that the flat side of the washer is towards the Base Extrusion. The Bolt should pass through the Clipped Washer, the Base Extrusion, the Rubber Washer and then through the Boat Deck. The Bolt should be secured by first adding the Flat Washer (Item #6) and then securing with a Nylock Nut (Item #7).

NOTE: The Short Bolts are not used when installing the Ulterra directly to the boat.

⚠ CAUTION

Use extra care to avoid pinching and damaging the sensor wires that run along side of the Base Extrusion when installing and tightening the motor mounting bolts.

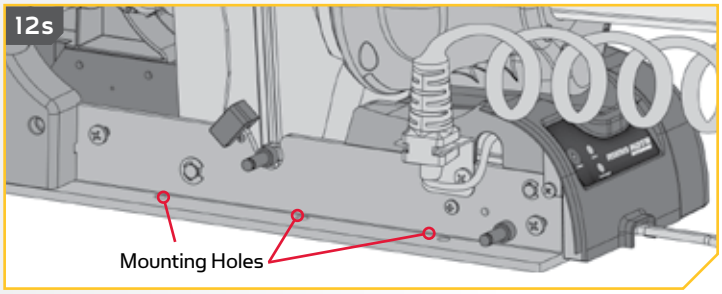

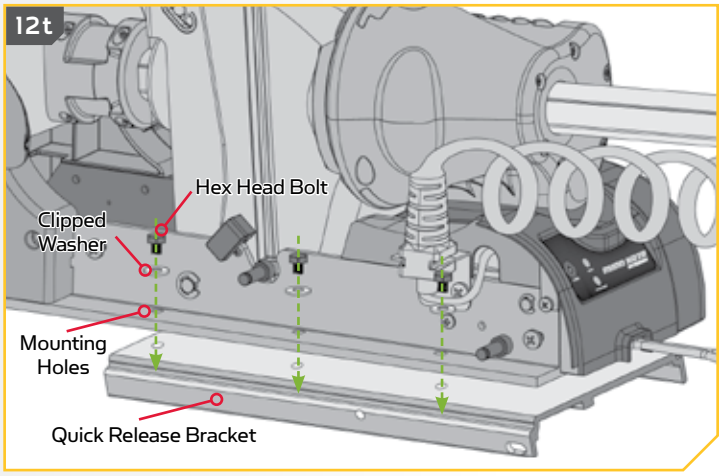

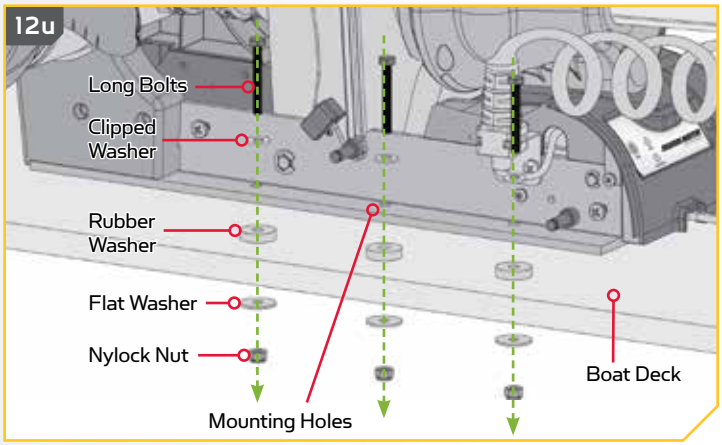

13

v. At this point in the installation process the Motor should be secured to the deck of the boat, and the Motor can now be reassembled. The Extension Damper can be slid back in place on the Damper Pins. This should be done so the shaft on the Damper is pointing inboard. Reinstall the two 5/16" E-clips.

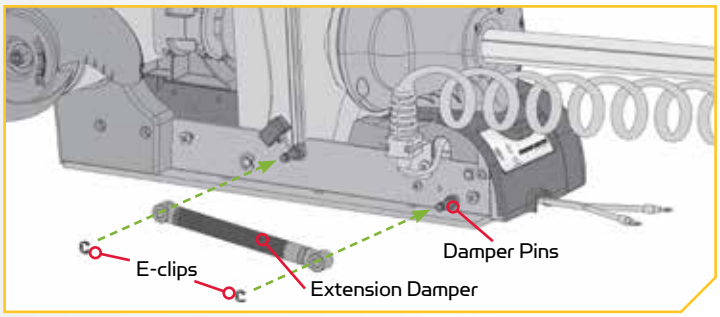

14

w. Replace the Right Sideplate.

x. Replace the Left Sideplate.

y. Replace the four sideplate Screws using a #2 or #3 Phillips Screw Driver.

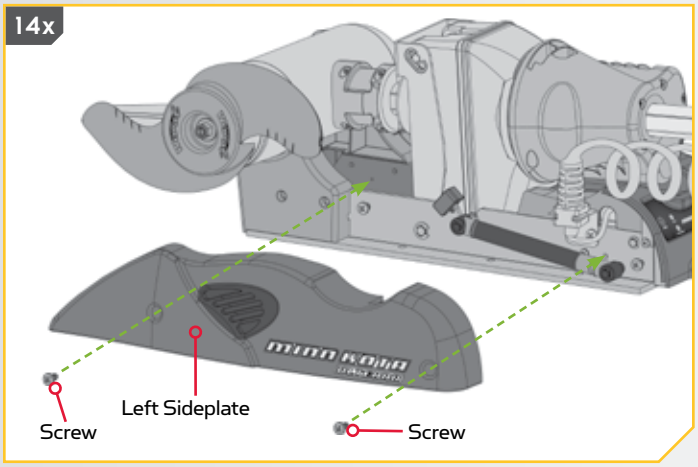

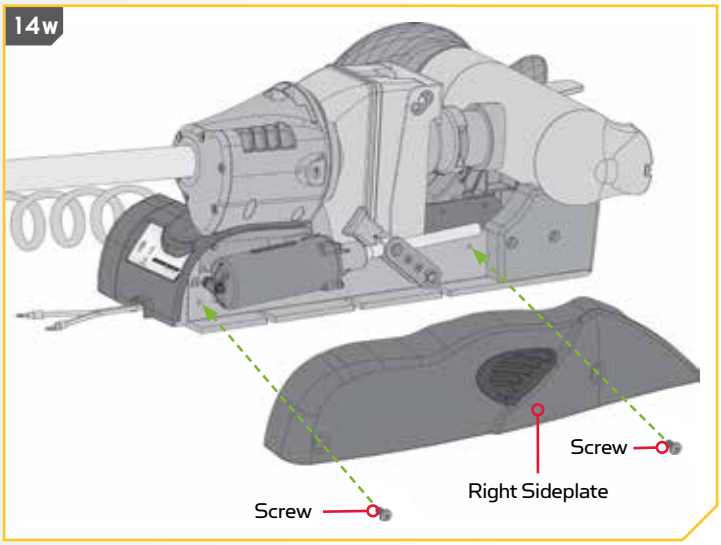

15

ITEM(S) NEEDED

#18 x 4

#EE x 1

z. Take the Foot Pedal (Item #EE) and turn it over. Put a Foot Pedal Pad (Item #18) in each of the pad locations.

NOTE: The pads are recommended when using the Foot Pedal on non-carpeted surfaces.

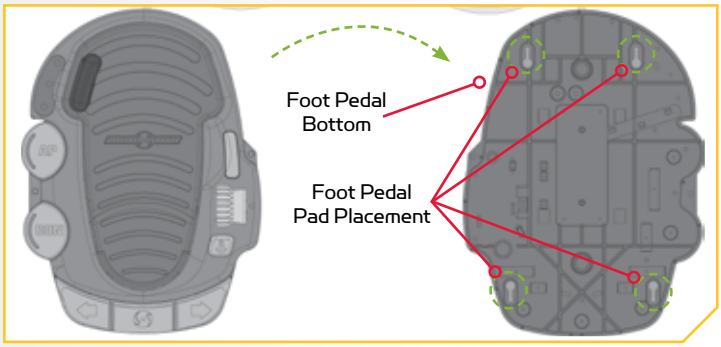

Routing Universal Sonar & i-Pilot Link Cables

Your trolling motor may be pre-installed with a Universal Sonar transducer system. Universal Sonar is a 2D sonar transducer with a temperature sensor that is integrated into the lower unit of the trolling motor. It has an operating frequency of 83/200 kHz. Connecting this transducer to a compatible fish finder* gives you a 2D sonar view of what is happening directly below your trolling motor. The integrated design protects the transducer from underwater hazards, and prevents tangles and damage to the transducer cables.

In certain situations, air bubbles may adhere to the surface of the Universal Sonar transducer, and affect the performance. If this happens simply wipe the surface of the transducer with your finger.

All Universal Sonar motors are equipped with an internal bonding wire, incorrect rigging will cause sonar interference and can damage your trolling motor, electronics and other boat accessories. Please refer to the Battery & Wiring Installation and Motor Wiring Diagram sections of this manual for correct rigging instructions.

NOTE: Universal Sonar only provides 2D sonar that operates at 83/200 kHz. It does not support imaging screens that require higher frequencies such as 455 kHz or 800 kHz (Down Imaging, Side Imaging, etc.). Down Imaging (DI) specific units are not compatible with Universal Sonar. See compatibility chart for a list of compatible fish finders at minnkotamotors.com. *Requires an adapter that is sold separately. For a current list of compatible fish finders and the correct adapter cable, please visit minnkotamotors.com.

Your trolling motor may be pre-installed with a Universal Sonar transducer system. For compatibility and more information on Universal Sonar, please visit minnkotamotors.com. Your trolling motor may also be pre-installed with either i-Pilot or i-Pilot Link. To learn more about the GPS capabilities available with your i-Pilot or i-Pilot Link navigation system, please refer to the corresponding Owner's Manual by visiting minnkotamotors.com.

Both the Universal Sonar and i-Pilot Link features require cables to be connected to an output device. These connections are present on the trolling motor below the Control Head. The i-Pilot system does not need an external wired connection. If only one connection is present, it is because your motor is equipped with the i-Pilot system. If only a single connection is present, it is to connect the Universal Sonar. If two cables are present, one is to connect the Universal Sonar, and the other is to connect the i-Pilot Link connection. Please follow the Minn Kota recommendations on routing the cables to optimize mobility and maximize functionality. The routing will be the same regardless of the number of cables present. Use the following instructions to properly route cables.

The Universal Sonar Cables are shielded to minimize interference. To protect this shielding the cables should not be pulled tight against sharp angles or hard objects. If using cable ties, do not over-tighten. Any excess cable should be bundled in a loose loop of no less than 4" in diameter.

To minimize trolling motor interference, ensure that the fish finder and trolling motor are powered by separate batteries. Please refer to the Battery & Wiring Installation and Motor Wiring Diagram sections of this manual for correct rigging instructions.

To better identify cables present that exit the Control Head, refer to the diagrams below that detail what the Universal Sonar and i-Pilot Link cable connectors look like.

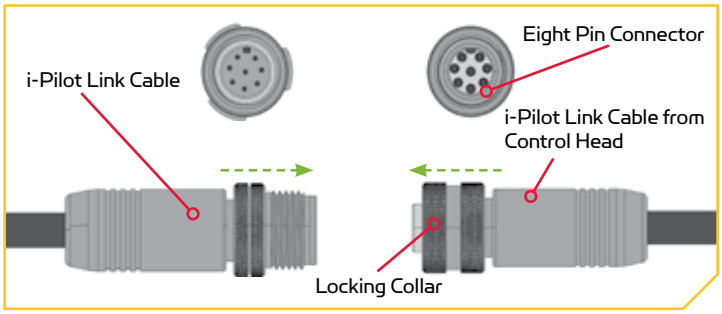

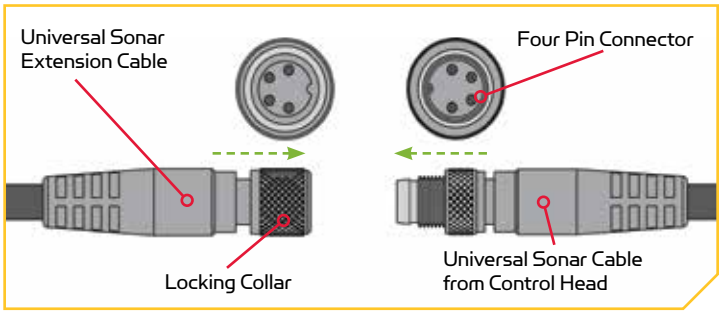

1

a. Deploy the Motor.

b. Locate the Universal Sonar and/or the i-Pilot Link cable(s), at the base of the Control Head.

⚠ CAUTION

Not following the recommended wire routing for the Universal Sonar and/or i-Pilot Link cable(s), if equipped, may cause damage to the product and void your product warranty. Route cables away from pinch points or other areas that may cause them to bend in sharp angles. Routing the cables in any way other than directed may cause damage to the cables by being pinched or severed.

c. The Universal Sonar Cable and/or i-Pilot Link cable should be fed all the way through the Coil Cord. It/they should exit the Coil Cord at the bottom of the Coil Cod, where it connects to the Motor Mount.

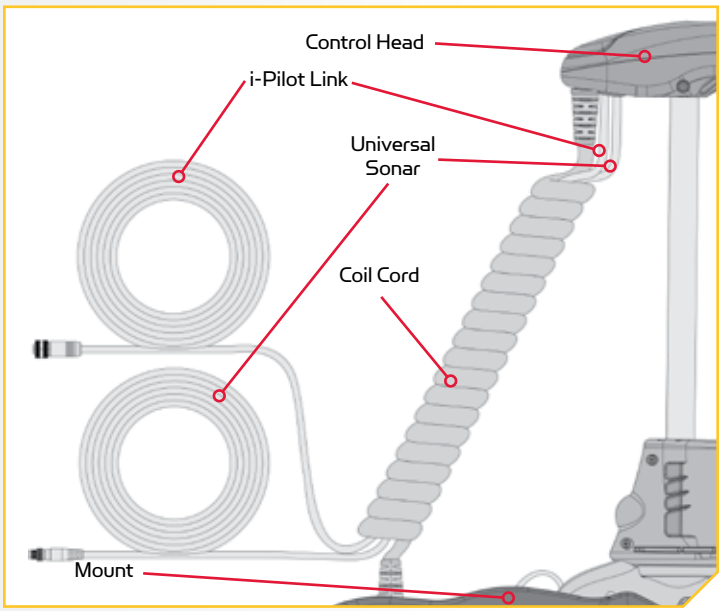

NOTE: After the Universal Sonar Cable and/or i-Pilot Link Cable exits the Coil Cord, it should be routed through an established routing system on the boat, in an area with minimal interference. Inspect the selected route carefully to ensure that there are no sharp edges, obstacles, or obstructions that may damage the cables.

Connecting a Universal Sonar Extension Cable

The Universal Sonar Cable may not be long enough to reach the fish finder. If the cable length does not reach the desired fish finder installation location, a 14.5' extension cable is available. Minn Kota recommends using the MKR-US2-11.

1

a. Deploy the Motor.

b. Locate the Universal Sonar, if equipped, at the base of the Motor Mount.

c. Locate the Universal Sonar four pin connector at the end of Universal Sonar Extension Cable. The connector is black with a stainless steel threaded locking collar.

NOTE: Your fish finder should be turned off until this procedure is complete.

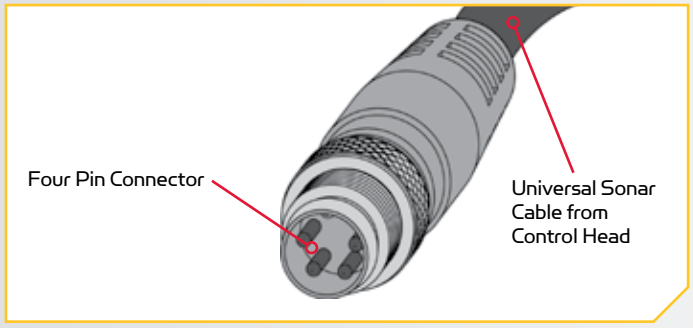

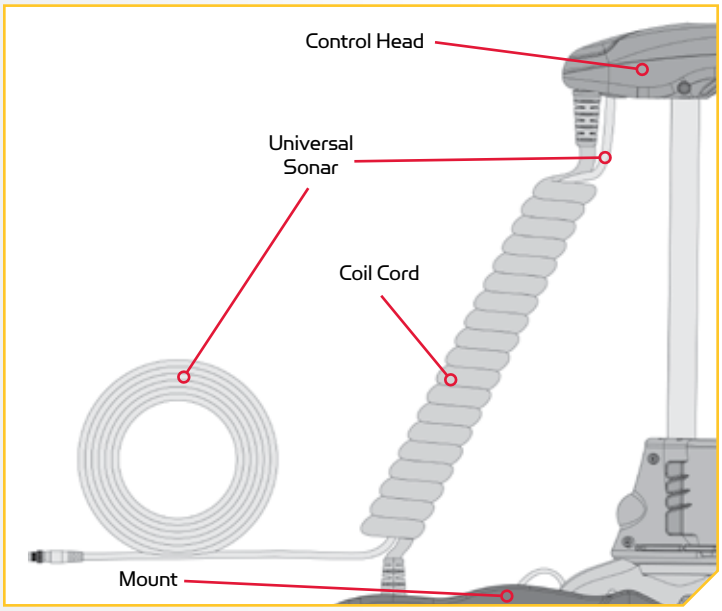

NOTE: If the cable length does not reach the desired fish finder installation location, a 14.5' extension cable is available (MKR-US2-11) (sold separately).

2

d. Align the pins of the Universal Sonar connector plug from the Control Head with the matching socket end of the appropriate Universal Sonar Extension Cable for your fish finder. Firmly push the connector plug into the socket of the Universal Sonar connection. Twist the locking collar until it is snug.

e. Connect the other end of your adapter plug to your fish finder following the manufacturer's instructions.

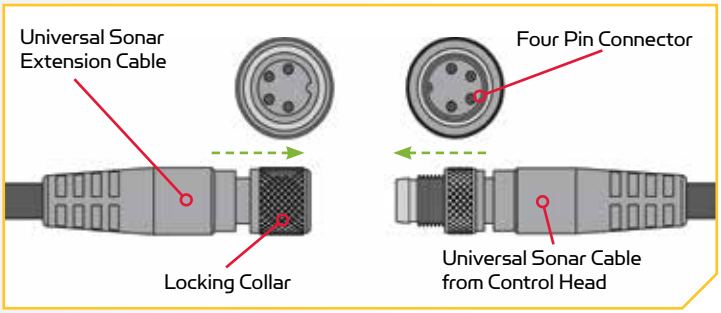

NOTE: The connectors are keyed to prevent reversed installation.

BATTERY & WIRING INSTALLATION

BOAT RIGGING & PRODUCT INSTALLATION

For safety and compliance reasons, we recommend that you follow American Boat and Yacht Council (ABYC) standards when rigging your boat. Altering boat wiring should be completed by a qualified marine technician. The following specifications are for general guidelines only:

⚠ CAUTION

These guidelines apply to general rigging to support your Minn Kota motor. Powering multiple motors or additional electrical devices from the same power circuit may impact the recommended conductor gauge and circuit breaker size. If you are using wire longer than that provided with your unit, follow the conductor gauge and circuit breaker sizing table below. If your wire extension length is more than 25 feet, we recommend that you contact a qualified marine technician.

⚠ CAUTION

An over-current protection device (circuit breaker or fuse) must be used. Coast Guard requirements dictate that each ungrounded current-carrying conductor must be protected by a manually reset, trip-free circuit breaker or fuse. The type (voltage and current rating) of the fuse or circuit breaker must be sized accordingly to the trolling motor used. The table below gives recommended guidelines for circuit breaker sizing.

CONDUCTOR GAUGE AND CIRCUIT BREAKER SIZING TABLE

This conductor and circuit breaker sizing table is only valid for the following assumptions:

1. No more than 2 conductors are bundled together inside of a sheath or conduit outside of engine spaces.
2. Each conductor has 105° C temp rated insulation.
3. No more than 5% voltage drop allowed at full motor power based on published product power requirements.

Motor Thrust / Model	Max Amp Draw	Circuit Breaker	Wire Extension Length				
			5 feet	10 feet	15 feet	20 feet	25 feet
30 lb.	30	50 Amp @ 12 VDC	10 AWG	10 AWG	8 AWG	6 AWG	4 AWG
40 lb., 45 lb.	42		10 AWG	8 AWG	6 AWG	4 AWG	4 AWG
50 lb., 55 lb.	50	60 Amp @ 12 VDC	8 AWG	6 AWG	4 AWG	4 AWG	2 AWG
70 lb.	42	50 Amp @ 24 VDC	10 AWG	10 AWG	8 AWG	8 AWG	6 AWG
80 lb.	56	60 Amp @ 24 VDC	8 AWG	8 AWG	8 AWG	6 AWG	6 AWG
101 lb.	46	50 Amp @ 36 VDC	8 AWG	8 AWG	8 AWG	8 AWG	8 AWG
Engine Mount 101	50	60 Amp @ 36 VDC	8 AWG	6 AWG	4 AWG	4 AWG	2 AWG
112 lb.	52	60 Amp @ 36 VDC	8 AWG	8 AWG	8 AWG	8 AWG	8 AWG
Engine Mount 160	116	(2) x 60 Amp @ 24 VDC	2 AWG	2 AWG	2 AWG	2 AWG	2 AWG
E-Drive	40	50 Amp @ 48 VDC	10 AWG	10 AWG	10 AWG	10 AWG	10 AWG

NOTE: Wire Extension Length refers to the distance from the batteries to the trolling motor leads. Consult website for available thrust options. Maximum Amp Draw values only occur intermittently during select conditions and should not be used as continuous amp load ratings.

Reference

United States Code of Federal Regulations: 33 CFR 183 – Boats and Associated Equipment ABYC E-11: AC and DC Electrical Systems on Boats

SELECTING THE CORRECT BATTERIES

The motor will operate with any lead acid, deep cycle marine 12 volt battery/batteries. For best results, use a deep cycle, marine battery with at least a 105 amp-hour rating. Maintain battery at full charge. Proper care will ensure having battery power when you need it, and will significantly improve the battery life. Failure to recharge lead-acid batteries (within 12-24 hours) is the leading cause of premature battery failure. Use a multi-stage charger to avoid overcharging. We offer a wide selection of chargers to fit your charging needs. If you are using a crank battery to start a gasoline outboard, we recommend that you use a separate deep cycle marine battery/batteries for your Minn Kota trolling motor. For more information on battery selection and rigging, please visit minnkotamotors.com.

⚠ WARNING

Never connect the (+) and the (–) terminals of the same battery together. Take care that no metal object can fall onto the battery and short the terminals. This would immediately lead to a short and extreme fire danger.

⚠ CAUTION

Refer to "Conductor Gauge and Circuit Breaker Sizing Table" in the previous section to find the appropriate circuit breaker or fuse for your motor. For motors requiring a 60-amp breaker, the Minn Kota MKR-19 60-amp circuit breaker is recommended.

⚠ CAUTION

Please read the following information before connecting your motor to your batteries in order to avoid damaging your motor and/or voiding your warranty.

ADDITIONAL CONSIDERATIONS

Using DC or Alternator Chargers

Your Minn Kota trolling motor may be designed with an internal bonding wire to reduce sonar interference. Most alternator charging systems do not account for this bonding wire, and connect the negative posts of the trolling motor batteries to the negative posts of the crank/starting battery. These external connections can damage connected electronics and the electrical system of your trolling motor, voiding your warranty. Review your charger's manual carefully or consult the manufacturer prior to use to ensure your charger is compatible.

Minn Kota recommends using Minn Kota brand chargers to recharge the batteries connected to your Minn Kota trolling motor, as they have been engineered to work with motors that include a bonding wire.

Additional Accessories Connected to Trolling Motor Batteries

Significant damage to your Minn Kota motor, your boat electronics, and your boat can occur if incorrect connections are made between your trolling motor batteries and other battery systems. Minn Kota recommends using an exclusive battery system for your trolling motor. Where possible, accessories should be connected to a separate battery system. Radios and sonar units should not be connected to any trolling motor battery systems as interference from the trolling motor is unavoidable. If connecting any additional accessories to any trolling motor battery system, or making connections between the trolling motor batteries and other battery systems on the boat, be sure to carefully observe the information that follows.

The negative (-) connection must be connected to the negative terminal of the same battery that the trolling motor negative lead connects to. In the diagrams below this battery is labeled "Low Side" Battery. Connecting to any other trolling motor battery will input positive voltage into the "ground" of that accessory, which can cause excess corrosion. Any damage caused by incorrect connections between battery systems will not be covered under warranty.

Automatic Jump Start Systems and Selector Switches

Automatic jump start systems and selector switches tie the negatives of the connected batteries together. Connecting these systems to the "High Side" Battery or "Middle" Battery in the diagrams below and will cause significant damage to your trolling motor and electronics. The only trolling motor battery that is safe to connect to one of these systems is the "Low Side" Battery.

NOTE: The internal bonding wire is equipped with a 3 amp fuse. Improper connections described above carrying in excess of 3 amps will blow this fuse and no further damage will be exhibited. If this occurs, RF interference from the trolling motor affecting sonar units and other electronics will be more significant. If the fuse is blown the wiring error should be found and addressed prior to replacing the fuse. The replacement fuse should be 3 amps or less. An intact fuse does not imply correct rigging; significant damage can be done by incorrect wiring without approaching 3 amps of current.

CONNECTING THE BATTERIES IN SERIES (IF REQUIRED FOR YOUR MOTOR)

24 Volt Systems

Two 12 volt batteries are required. The batteries must be wired in series, only as directed in wiring diagram, to provide 24 volts.

1. Make sure that the motor is switched off (speed selector on "0").
2. Connect a connector cable to the positive (+) terminal of battery 1 and to the negative (–) terminal of battery 2.
3. Connect positive (+) red motor lead to positive (+) terminal on battery 2.
4. Connect negative (–) black motor lead to negative (–) terminal of battery 1.

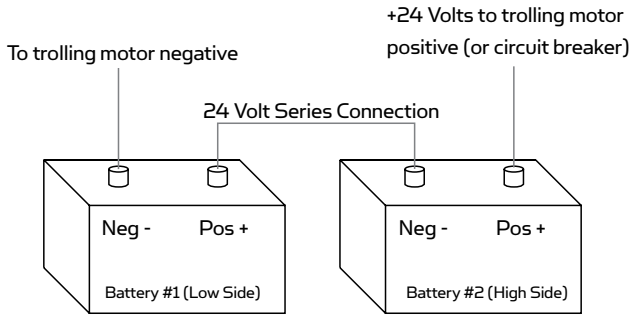

Two 12-volt batteries connected in series for 24 volts

WARNING

For safety reasons do not switch the Prop on until the propeller is in the water. If installing a leadwire plug, observe proper polarity and follow instructions in your boat owner's manual.

WARNING

- For safety reasons, disconnect the motor from the battery or batteries when the motor is not in use or while the battery/batteries are being charged.
- Improper wiring of 24/36 volt systems could cause battery explosion.
- Keep leadwire wing nut connections tight and solid to battery terminals.
- Locate battery in a ventilated compartment.

36 Volt Systems

Three 12 volt batteries are required. The batteries must be wired in series, only as directed in wiring diagram, to provide 36 volts.

1. Make sure that the motor is switched off (speed selector on "0").
2. Connect a connector cable to the positive (+) terminal of battery 1 and to the negative (–) terminal of battery 2 and another connector cable from the positive (+) terminal of battery 2 to the negative (–) terminal of battery of battery 3.
3. Connect positive (+) red motor lead to positive (+) terminal on battery 3.
4. Connect negative (–) black motor lead to negative (–) terminal of battery 1.

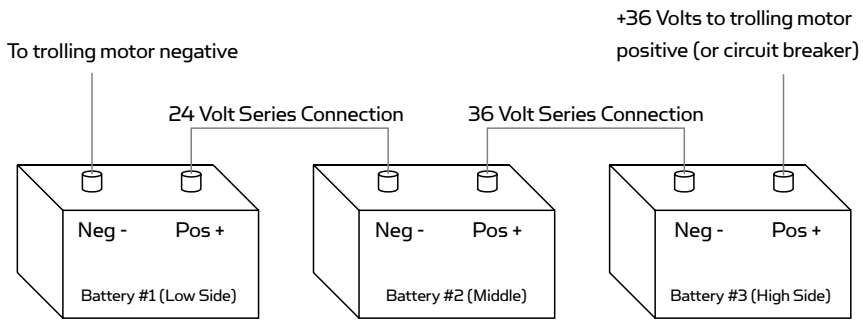

Three 12-volt batteries connected in series for 36 volts

WARNING

For safety reasons do not switch the Prop on until the propeller is in the water. If installing a leadwire plug, observe proper polarity and follow instructions in your boat owner's manual.

WARNING

- For safety reasons, disconnect the motor from the battery or batteries when the motor is not in use or while the battery/batteries are being charged.
- Improper wiring of 24/36 volt systems could cause battery explosion.
- Keep leadwire wing nut connections tight and solid to battery terminals.
- Locate battery in a ventilated compartment.

MOTOR WIRING DIAGRAM

ULTERRA WITH i-PILOT OR i-PILOT LINK

The following Motor Wiring Diagram applies to all Ulterra models that come factory installed with either i-Pilot or i-Pilot Link. Universal Sonar is an optional feature that may come factory installed.

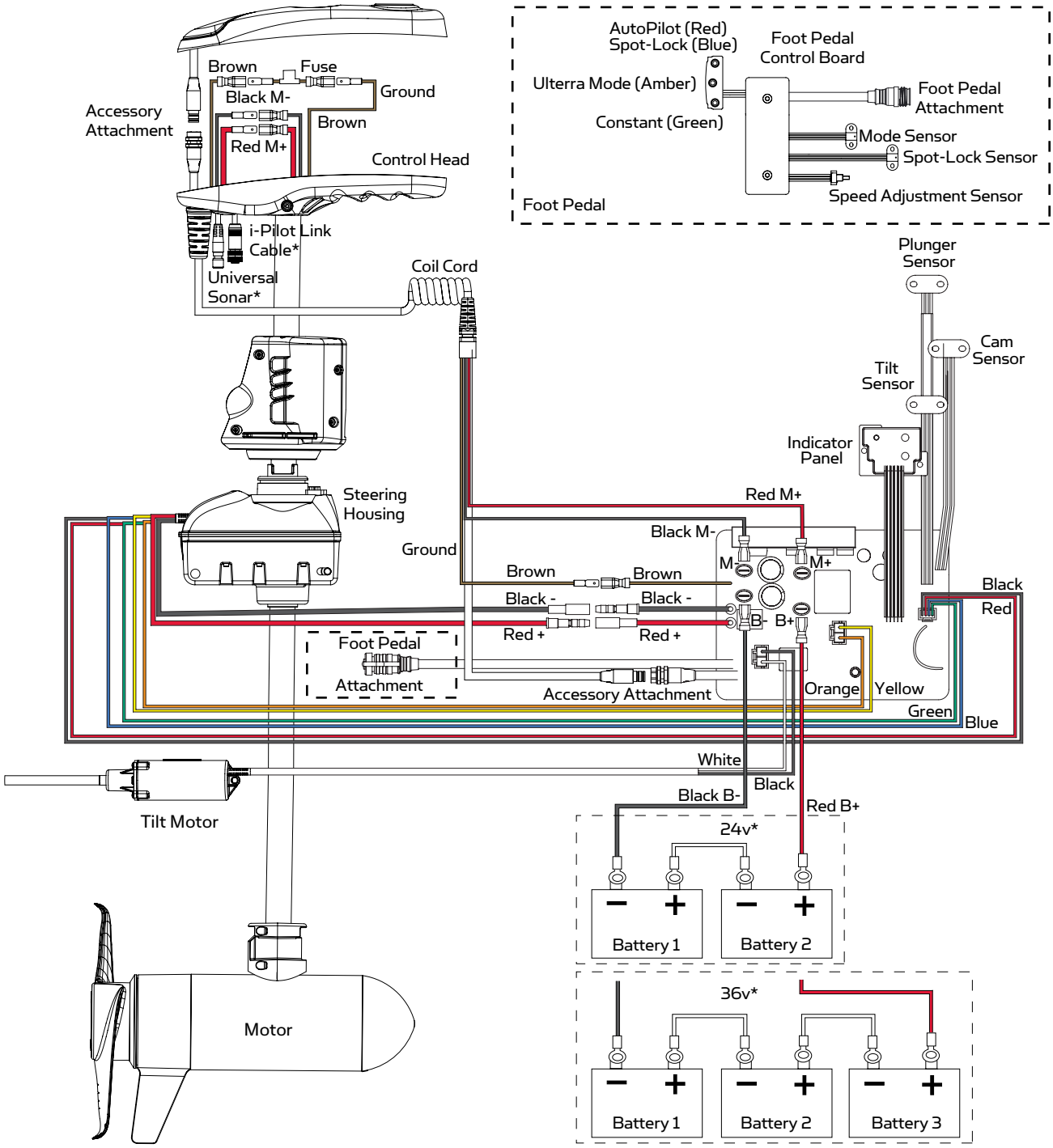

NOTE: This is a multi-voltage diagram. Double-check your motor's voltage for proper connections. Over-Current Protection Devices are not shown in this illustration. If equipped with Universal Sonar, please see instruction sheet on the website at minnkotamotors.com. i-Pilot Link Cable attachement for i-Pilot Link only.

USING & ADJUSTING THE MOTOR

MOUNT FEATURES

Become familiar with the features of the motor to maximize the capabilities this product offers.

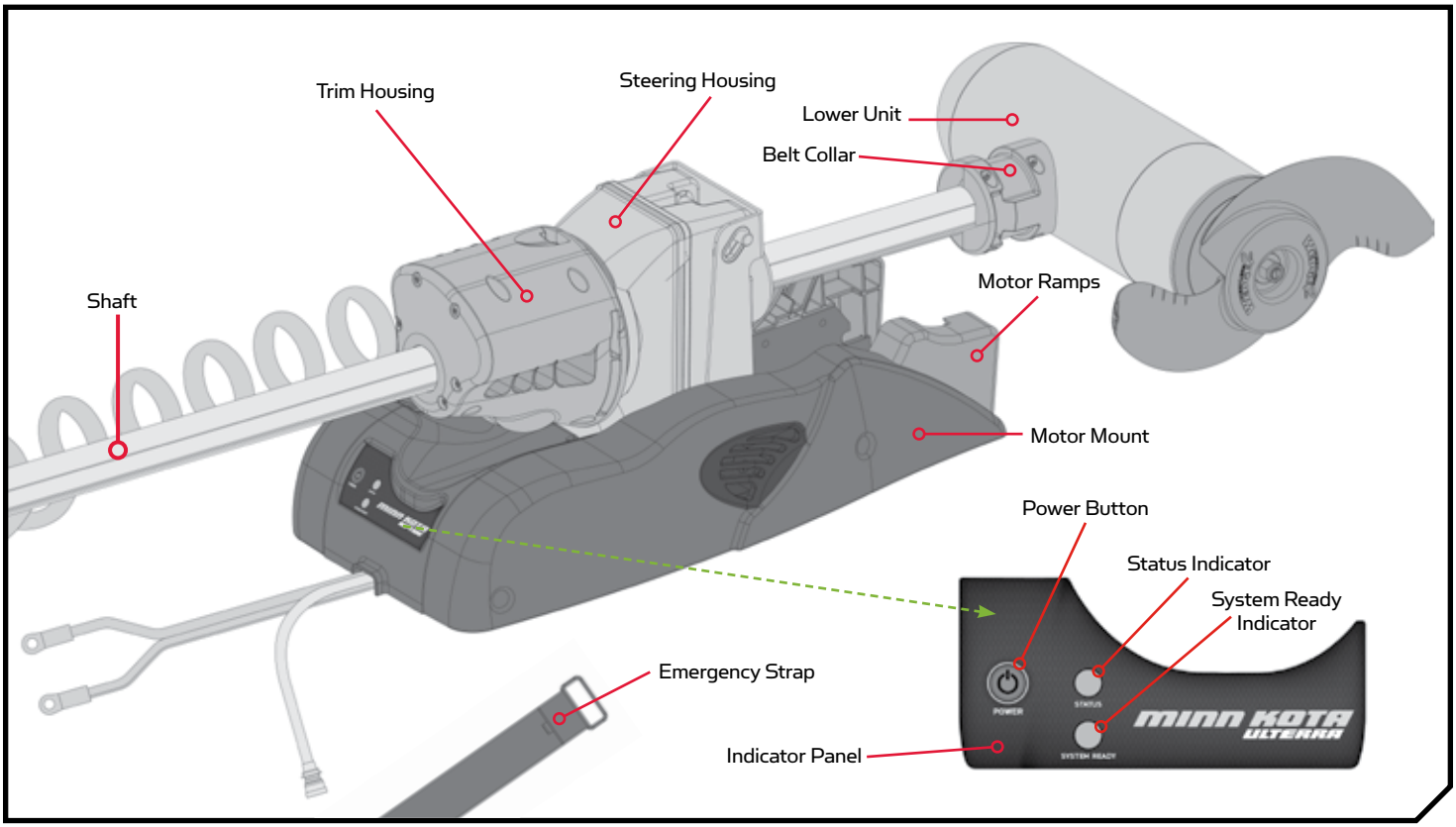

Power Button

The Ulterra must be powered "on" and "off" manually. The remote will not turn the motor "on" or "off". The Power button is located on the base of the motor on the Indicator Panel. Press the Power button to turn the motor "on". When the motor is in the stowed position, the Status Indicator will be illuminated red and the System Ready Indicator will be illuminated green when powered "on". To power the motor "off", press and hold the Power button approximately three seconds, until the green light turns off. Ulterra has an auto-shut off as well. It will automatically power off after 1.5 hours of inactivity in the stowed position.

NOTE: Remember to turn the power off when the motor is not in use to prevent the motor from draining the battery.

⚠ CAUTION

Make sure that the Power switch is turned off when the motor is not in use. If the motor control is left on and the propeller rotation is blocked, severe motor damage can result.

For safety reasons, disconnect the motor from the battery/batteries when the motor is not in use or while the battery/batteries are being charged.

Status Indicator

The Status Indicator is located on the Indicator Panel on the base of the motor and works while the motor is powered "on". The LED associated with the Status Indicator will be illuminated red when the motor is stowed and will not be

illuminated STATUS when the motor is deployed. When the motor is being either stowed or deployed, the red LED will be flashing.

WARNING

When stowing or deploying the motor, keep fingers clear of all hinges, pivot points, pinch points and all moving parts.

System Ready Indicator

The System Ready Indicator is located on the Indicator Panel on the base of the motor and works while the motor is powered "on". The LED associated with the System Ready Indicator will be illuminated SYSTEM READY green when the motor is operating. If the green light does not remain illuminated SYSTEM READY after power up, this is an indicator of insufficient voltage/power.

Motor Mount

The Motor Mount is designed to securely hold the motor in place on the deck of the boat. It functions to stow and lock the motor flat on the deck when not in use by providing secure stowage for transport. The motor mount also positions the motor when it is in the deployed position.

Mount Ramp

The Mount Ramp functions to hold the Lower Unit in place when the motor is stowed. The Lower Unit will rest on the Mount Ramp when stowed, helping to secure it in place.

Emergency Strap

The Emergency Strap must be used to place pressure on the motor shaft to hold the lower unit tightly against the Motor Ramps when the motor is manually stowed. The Emergency Strap should be secured every time the motor is manually stowed to prevent damage from high wind, rough water or vibrations, including while the boat is trailered. See the "Manually Stowing the Ulterra" section of the manual for more information on when the Emergency Strap is needed.

Belt Collar

The Belt Collar holds the lower portion of the Lift Belt in place. The Lift Belt is runs along the motor Shaft and is used to stow and deploy the motor. See the "Adjusting the Left Belt" section of this manual if the Lift Belt becomes loose anywhere along the Shaft above the Belt Collar.

WARNING

When the motor is being transported, it is important to always stow the Motor and make sure it is locked in place. A secure stow holds the motor in place during transportation when it is subject to high levels of shock and vibration. Failure to stow the motor may result in injury or damage to the unit.

MOTOR ADJUSTMENTS

Change the Prop Orientation

When the motor is mounted onto the boat, the orientation of the Prop may be changed to either Inboard or Outboard to accommodate different boat cover configurations. Complete the following steps to change prop orientation.

WARNING

When the motor is powered "off" while off the Motor Ramps, never turn the lower unit of the motor manually (by hand). This will affect the alignment of the motor and cause it to stow improperly.

1

a. Be sure the motor is connected to a power source and turn the motor "on".

WARNING

When stowing or deploying the motor, keep fingers clear of all hinges, pivot points and all moving parts. When stowing and deploying the motor, ensure that it doesn't contact the boat, trailer, or any other obstruction.

b. Deploy the motor using the Stow/Deploy Button on the Foot Pedal or using the i-Pilot or i-Pilot Link remote.

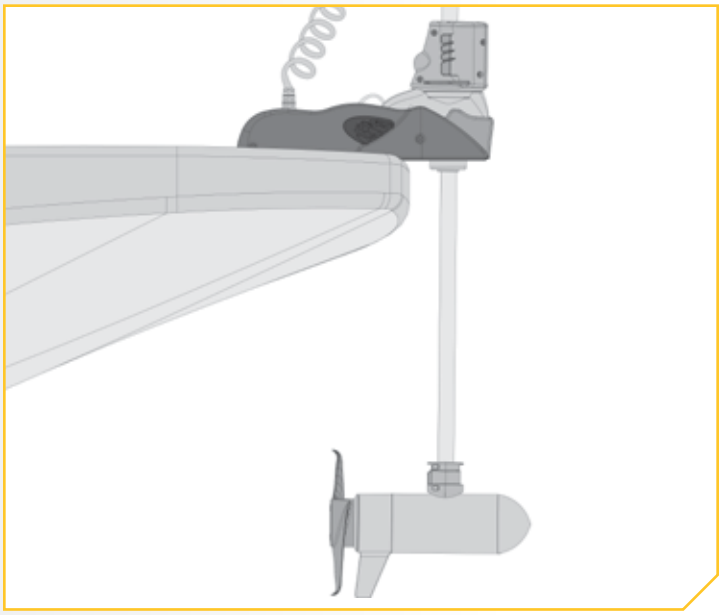

2

c. Turn the motor "off". Make sure the Power Cables from the battery are disconnected, or that the breaker, if equipped, is "off".

WARNING

Make sure the motor is mounted on a level surface and is not connected to a power source.

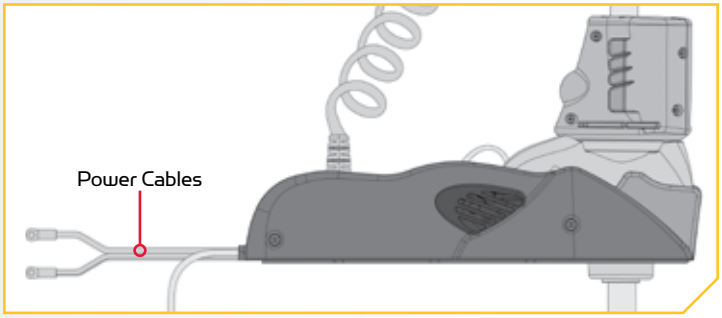

3

d. Locate the Trim Release Handle on the Side of the Trim Housing. Grasp the Trim Release Handle and pull it out.

WARNING

When using the Trim Handle or moving the Trim Housing, keep fingers clear of all hinges, pivot points and all moving parts above and below the Trim Housing.

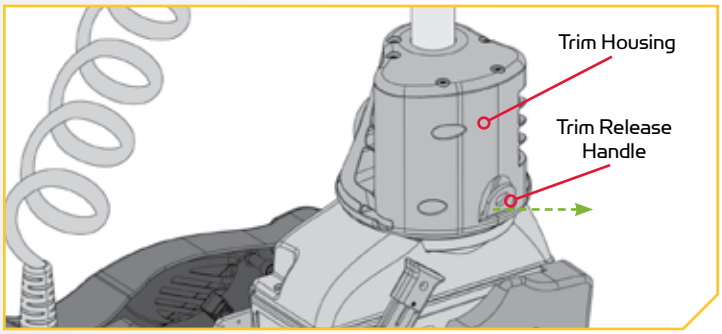

4

WARNING

When lifting the Trim Housing off the Steering Housing, power connections are exposed. Keep fingers and metal objects clear of exposed connections. The power from the connection is removed after 10 seconds once the connection is exposed.

e. While holding the Trim Release Handle out, grasp the Trim Housing and Shaft and lift them up off the Steering Housing. Wait a minimum of 10 second holding it in this position.

f. While holding Trim Housing and Shaft up, rotate them 180 degrees.

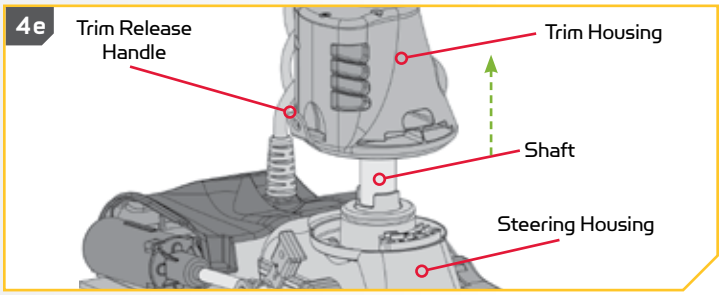

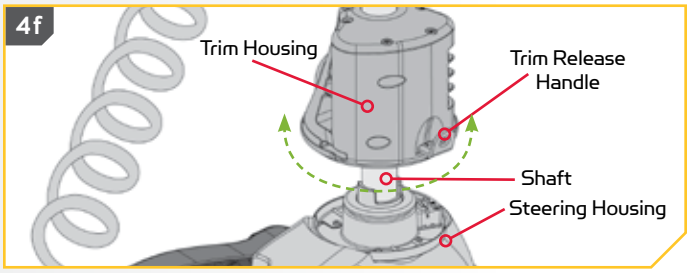

5

g. The Trim Housing and Shaft may be turned either clockwise, or counterclockwise depending on if the motor is originally mounted on either the Port or Starboard side of the boat and the necessary accommodations that will be needed for each individual situation.

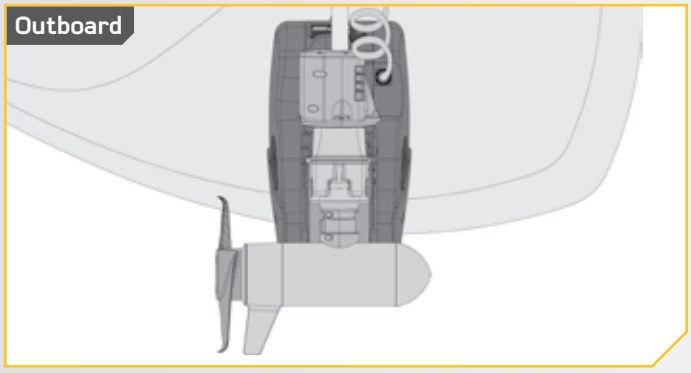

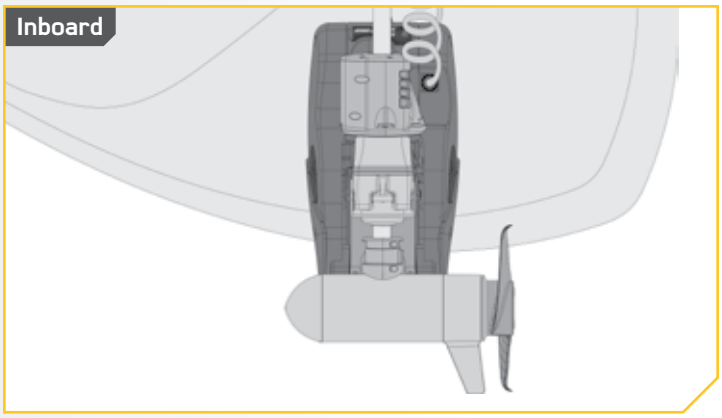

6

h. Once in the proper orientation, lower the Trim Housing and Shaft onto the Steering Housing.

i. Let the Trim Release Handle move back in place.

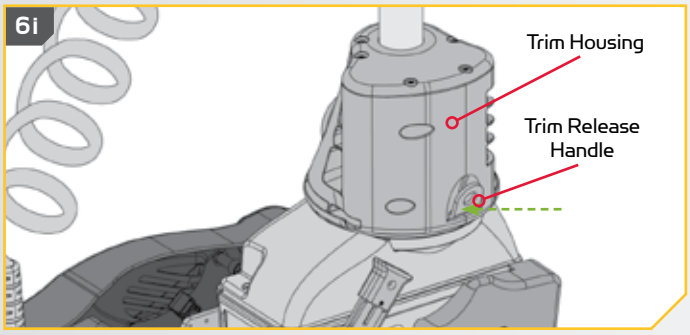

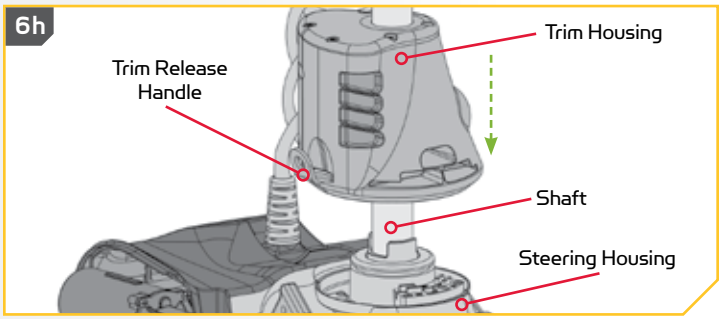

7

j. Reconnect the Power Cables to the battery and make sure the breaker, if equipped, is turned “on”. Turn the motor “on”.

k. Stow the motor using the Stow/Deploy Button on the Foot Pedal or using the i-Pilot or i-Pilot Link remote to check the orientation of the Prop.

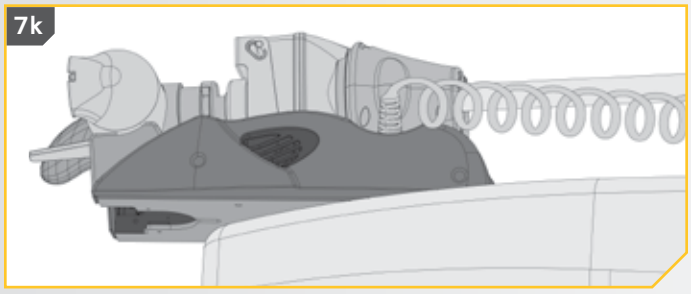

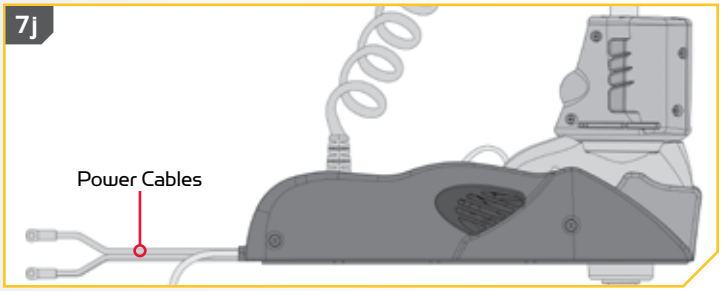

⚠ WARNING

When stowing or deploying the motor, keep fingers clear of all hinges, pivot points and all moving parts. When stowing and deploying the motor, ensure that it doesn’t contact the boat, trailer, or any other obstruction.

Adjusting the Lift Belt

The Lift Belt assists in Trimming the Lower Unit up and down. Periodically slack may appear in the Lift Belt along the Shaft of the motor. The screw that hold the tension on the Lift Belt may occasionally require small adjustments to maintain the tension on the belt.

1

a. Locate the Socket Head Cap Screw on the Bottom of the Control Head. It can be found between the Coil Cord and Shaft. This is the screw that is adjusted to increase the tension on the Lift Belt.

b. Using a 5/32" Allen Wrench, turn the Socket Head Cap Screw clockwise to tighten the Lift Belt.

c. The screw should be tightened to 8 to 10 inch-lbs.

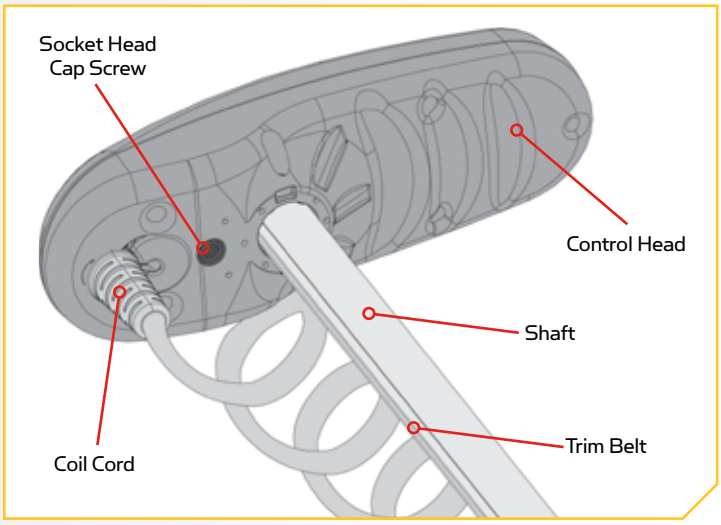

Greasing the Latch Pin and Power Tilt Motor Shaft

In order for the Ulterra to continue running at optimum performance, it is recommended that the Latch Pin and the Motor Shaft for the Power Tilt be greased every season. It is recommended to use a marine grade grease.

1

a. Deploy the motor.

b. Using a #3 Phillips Screwdriver, remove the Right Sideplate by removing the two screws that hold the sideplate in place. Removing the Right Sideplate will expose the Power Tilt and allow access to the Motor Shaft.

c. Apply a marine grade grease to the Power Tilt Motor Shaft.

d. Replace the Right Sideplate.

WARNING

When orientating the motor, keep fingers clear of all hinges, pivot points and all moving parts.

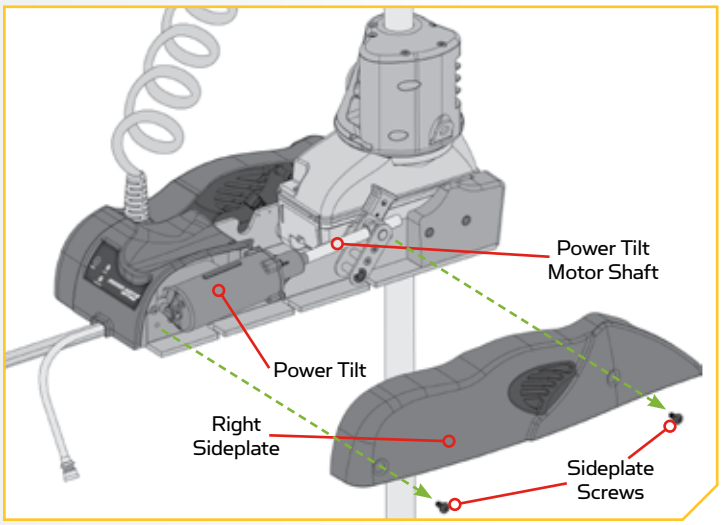

2

e. Stow the motor and locate the Latch Pin at the bottom of the Steering Housing.

f. Apply marine grade grease to both ends of the Latch Pin to maintain optimal performance.

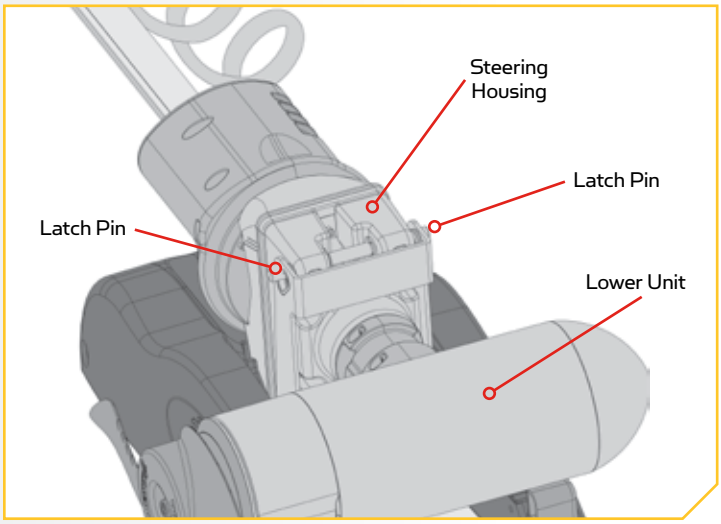

Stowing from the Ulterra Motor

In the unlikely event your i-Pilot or i-Pilot Link remote becomes non-functioning, you can stow the Ulterra from the base of the motor.

1

a. Locate the Indicator Panel at the base of the Mount.

b. Make sure that the motor is on by checking that the green LED next to the System Ready Indicator is on.

c. Press and hold the Power Button located on the Indicator Panel for 10 seconds.

d. The red and green LEDs next to the Status (red) and System Ready (green) Indicators will flash alternately, and the motor will begin to stow.

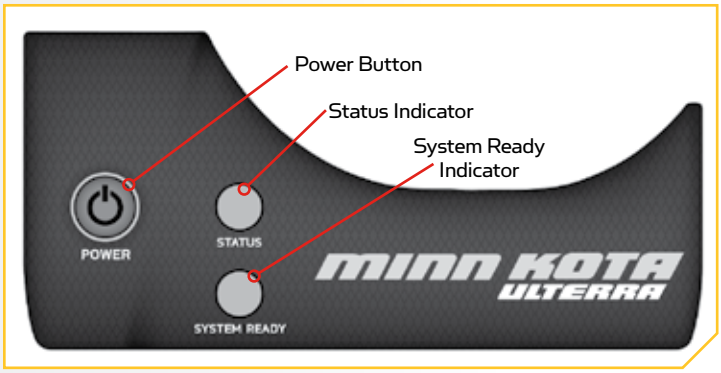

WARNING

During this procedure the motor will go into an automated sequence. Keep fingers clear of all hinges, pivot points and all moving parts. Ensure that the motor, or parts of the motor do not contact the boat, trailer, persons, or any other obstruction.

Trim/Stow Reset Procedure

In the unlikely event Ulterra will not trim or stow, the following procedure will reset the motor and restore functionality. If Ulterra does not reset, repeat the procedure. If the second attempt fails, please contact your local authorized service center or call Minn Kota service at (800) 227-6433.

1

WARNING

During this procedure the motor will go into an automated sequence. Keep fingers clear of all hinges, pivot points and all moving parts. Ensure that the motor, or parts of the motor do not contact the boat, trailer, persons, or any other obstruction.

NOTE: If the Lower Unit of the motor is trimmed within 6 inches of the Mount and the boat Hull is obstructing the motor's turning radius, manually turn the Control Head of the motor so that the Lower Unit is perpendicular to the Motor Ramps prior to beginning this procedure.

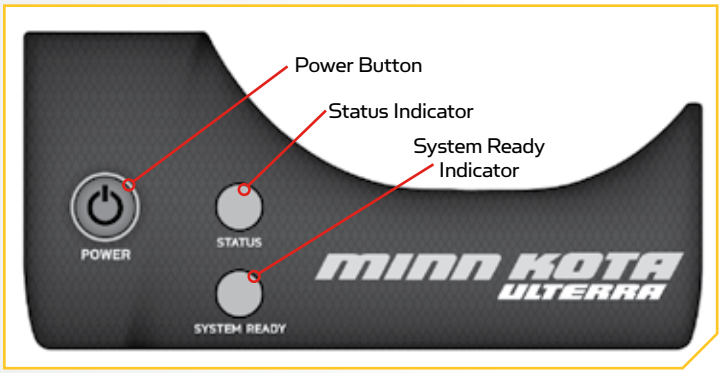

a. Locate the Indicator Panel at the base of the Mount.

b. Press and hold the Power Button located on the Indicator Panel to turn the motor off. Make sure that the motor is off by checking that the green LED light next to the System Ready Indicator is off.

c. Press the Power Button until the green LED illuminates and the motor is turned on.

d. Wait 3 seconds.

2

e. Press the Power Button 3 times consecutively within a 2 second period.

f. The red and green LEDs will flash continuously and the Ulterra will go through the following automated sequence:

- The motor will position itself into the proper orientation.
- The motor will automatically trim up to the Mount and then trim down approximately 6 inches.
- The flashing red LED next to the System Ready Indicator will turn off, and the flashing green LED next to the Status Indicator will become solid green.

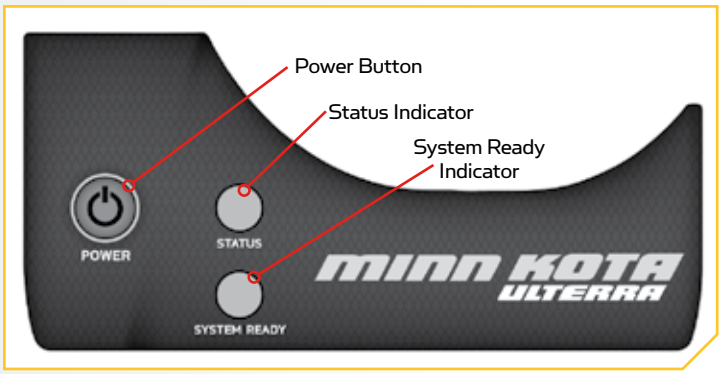

Manually Stowing the Ulterra

In the unlikely event that the motor will not stow from either the i-Pilot or i-Pilot Link remote or the Foot Pedal, the following alternative stow methods should solve the issue:

1. Trim/Stow Reset Procedure
2. Stowing from the Ulterra Motor
3. If your batteries lose power to the level that the motor will not stow, the motor will most likely stall at a 45 degree angle. If this occurs, reengage power, deploy the motor, trim motor to its highest setting, and turn power off until batteries can be recharged. Once batteries are charged, attempt to stow motor again.

If all three alternative methods have been tried and the motor will still not stow, there is a method to manually stow the motor.

⚠ CAUTION

Once the motor has been manually stowed, it will be non-operational until it is manually reset by an authorized service center.

If a manual stow must be done, follow the instructions below:

1

a. While the motor is in the deployed position, use a #3 Phillips Screwdriver, to remove the Right Sideplate. Do this by removing the two screws that hold the sideplate in place.

⚠ WARNING

Moving parts can cut or crush. When using the Trim Handle or moving the Trim Housing, keep fingers clear of all hinges, pivot points and all moving parts. The Tilt Motor Shaft and Tilt Motor Bracket can create a shear point between the Base Extrusion. Use caution when the sideplate is removed and mechanical parts are in motion.

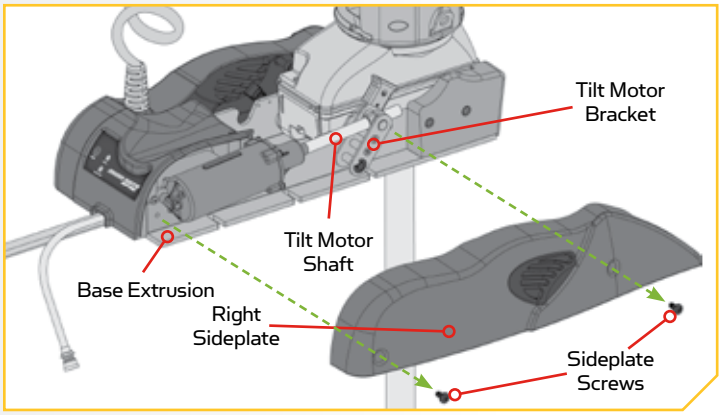

2

b. Using a #2 Phillips Screwdriver, loosen the screw on the Manual Tilt Knob.

c. The Manual Tilt Knob holds two Metal Plates together. Using a Flat Blade Screwdriver pry up on the Manual Tilt Knob until it releases from the Metal Plates.

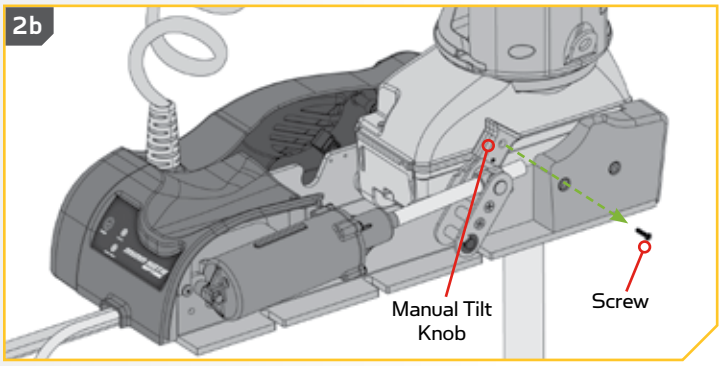

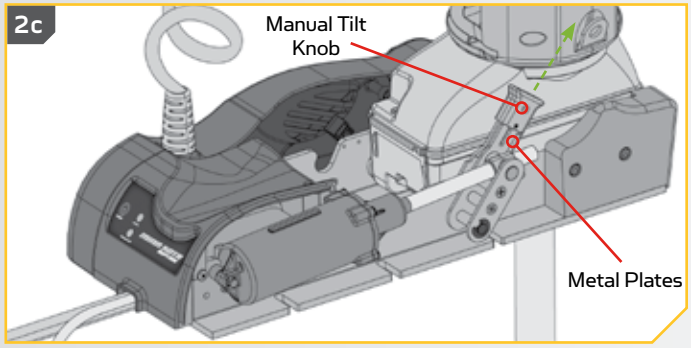

3

d. Locate the Trim Release Handle on the Side of the Trim Housing. Grasp the Trim Release Handle and pull it out.

WARNING

When using the Trim Handle or moving the Trim Housing, keep fingers clear of all hinges, pivot points and all moving parts above and below the Trim Housing.

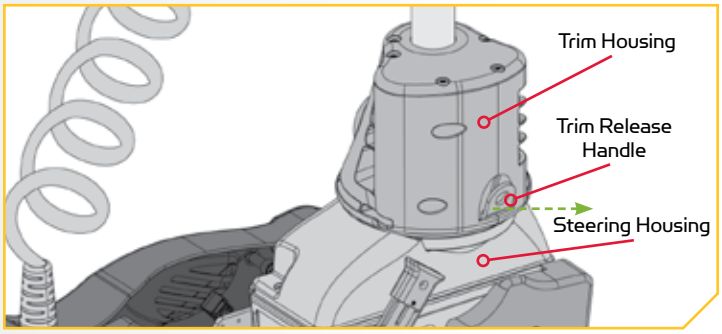

4

e. While holding the Trim Release Handle out, grasp the Trim Housing and Shaft and lift them up off the Steering Housing.

f. Lift up on the Trim Housing until Shaft and Trim Housing can be pulled up by hand.

WARNING

When lifting the Trim Housing off the Steering Housing, power connections are exposed. Keep fingers and metal objects clear of exposed connections. The power from the connection is removed after 10 seconds once the connection is exposed.

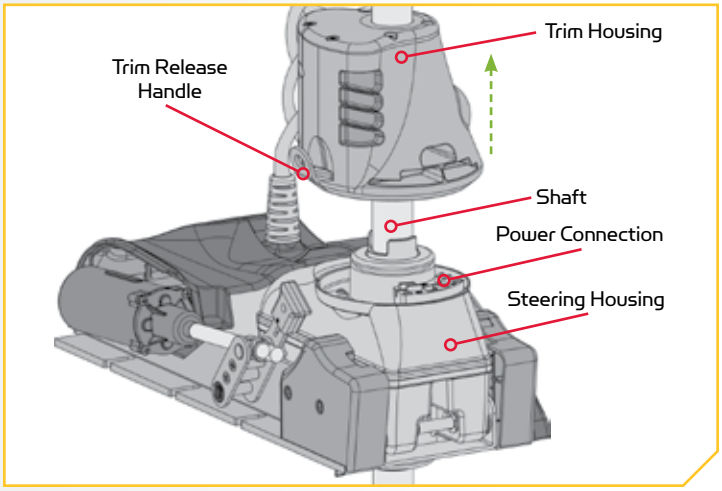

5

g. While the Trim Housing and Shaft are lifted up, release the Latch Pin Bracket.

h. Lift the Trim Housing, Shaft and Lower Unit up, and rotate it.

i. Pull the Lower Unit onto the Mount Ramps.

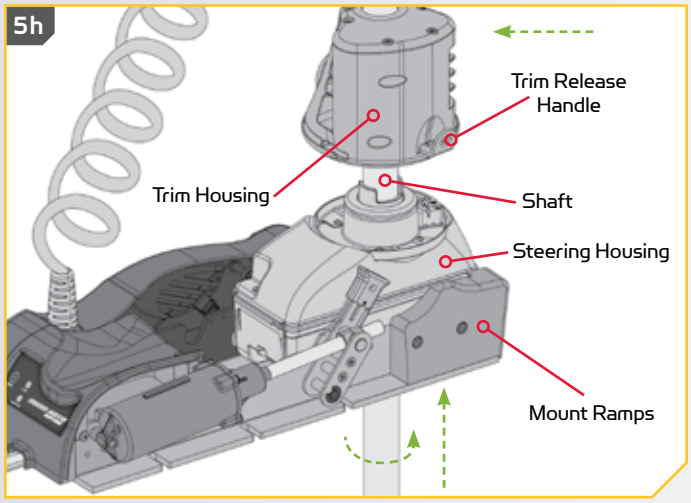

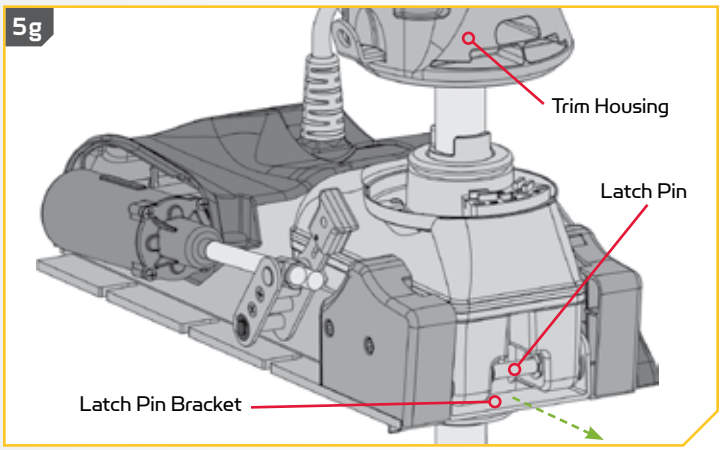

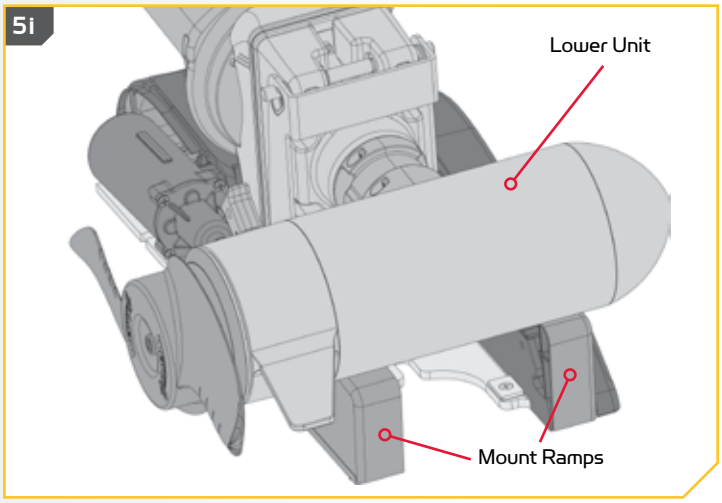

6

j. Secure the Lower Unit onto the Mount Ramps using the Emergency Strap that was provided with the motor. The D-ring on the Emergency Strap can be hooked into the Base Extrusion below the sideplate that was removed.

k. With the D-ring secured, wrap the Emergency Strap around the Lower Unit and secure it to itself. The Emergency Strap should be pulled tight enough that the Lower Unit rests securely on the Mount Ramps.

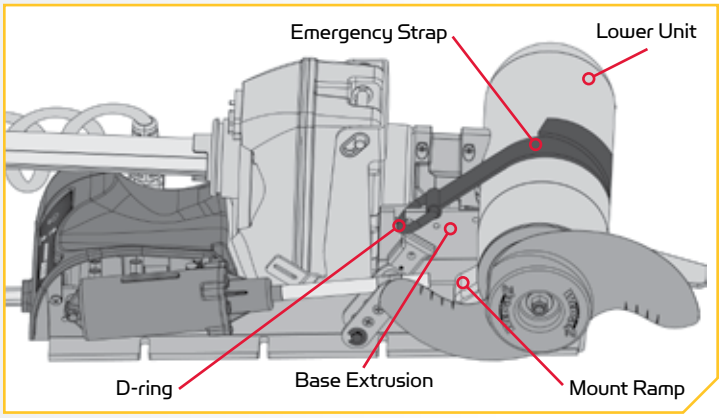

7

I. While the motor is in the stowed position, use a #3 Phillips Screwdriver, to replace the Right Sideplate, if desired. Do this by replacing the two screws that hold the sideplate in place.

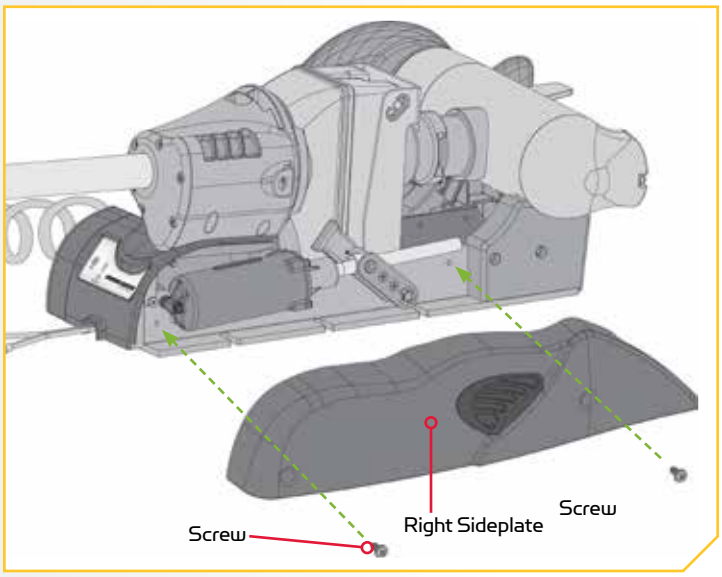

USING THE FOOT PEDAL

CONTROLLING SPEED & STEERING WITH THE FOOT PEDAL

The Foot Pedal is used to operate the motor, and controls on the Foot Pedal are easy to operate. The motor can also be controlled by an i-Pilot or i-Pilot Link remote, as well as any compatible Minn Kota remote. Please refer to the i-Pilot, i-Pilot Link or compatible remote manual on how the remote controls the motor.

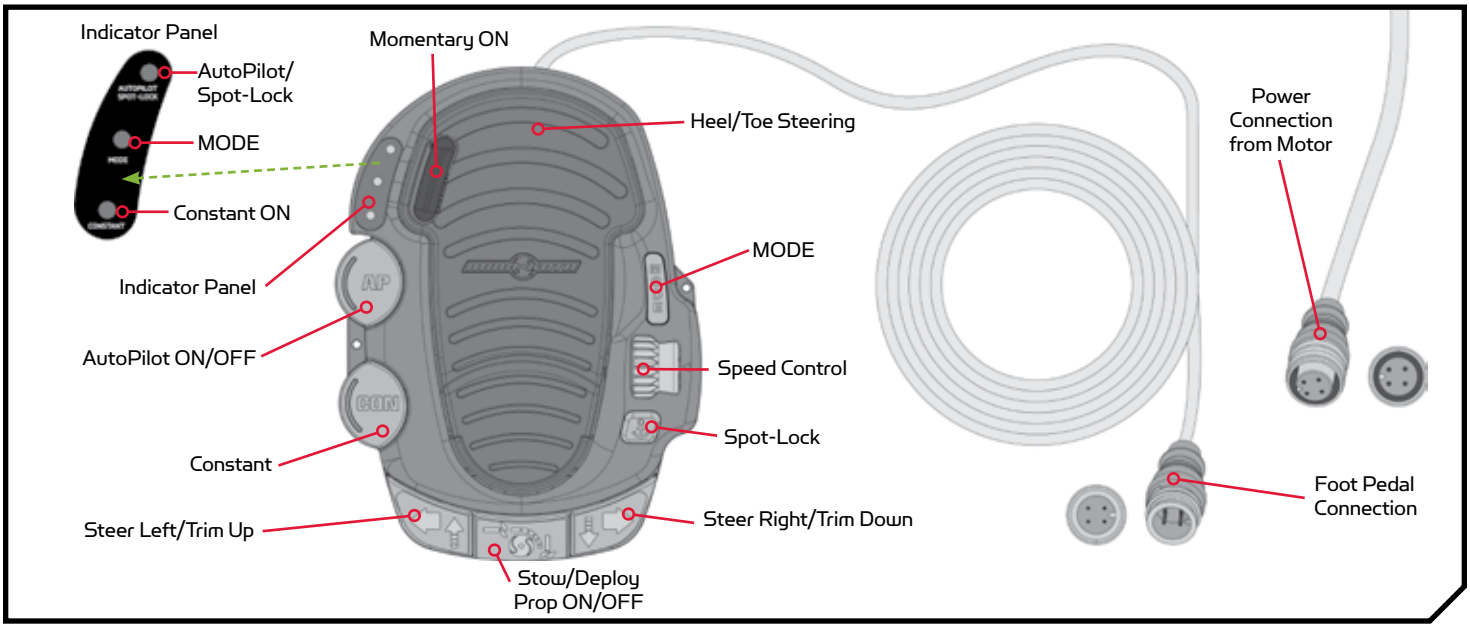

MODES

The Ulterra Foot Pedal has two modes of operation, Normal Mode and Ulterra Mode. To alternate between the Modes, press the MODE button located on the right side of the Foot Pedal, just above the Speed Control knob. The amber light on the Indicator Panel illuminates on and off when toggling between modes. The Indicator Panel is located on the top, left side of the Foot Pedal. Switching between the modes of operation affects the functionality of the three buttons at the bottom of the Foot Pedal. These buttons include:

1. Steer Left/Trim Up button
2. Stow/Deploy/Prop ON/OFF button
3. Steer Right/Trim Down button

WARNING

Practice proper ergonomics when operating the foot pedal to prevent injury.

Normal Mode

When in Normal Mode, the buttons at the bottom of the Foot Pedal function to Steer Left, Steer Right, and turn the Prop ON/OFF. The amber light on the Indicator Panel will not be illuminated when in Normal Mode.

Ulterra Mode

When in Ulterra Mode, the buttons at the bottom of the Foot Pedal function to Trim Up, Trim Down, and Stow/Deploy. The amber light on the Indicator Panel will be illuminated during Ulterra Mode.

FOOT PEDAL OPERATION

Motor Speed

The Speed Control knob is located on the right side of the Foot Pedal between the MODE and Spot-Lock buttons. Turn the Speed Knob forward to increase speed and backwards to decrease speed. The Speed Control knob can be set in a range from 0 to 10, and can be adjusted in both Normal and Ulterra Modes. Speed can also be adjusted using the remote.

WARNING

You are responsible for the safe and prudent operation of your vessel. We have designed Ulterra to be an accurate and reliable tool that will enhance boat operation and improve your ability to catch fish. This product does not relieve you from the responsibility for safe operation of your boat. You must avoid hazards to navigation and always maintain a permanent watch so you can respond to situations as they develop. You must always be prepared to regain manual control of your boat. Learn to operate your Ulterra in an area free from hazards and obstacles.

Spot-Lock

The Spot-Lock button is located on the bottom, right side of the Foot Pedal and is labeled with an anchor symbol. When the Spot-Lock button is pressed, the location of the motor is recorded to a temporary Spot-Lock location. The blue light next to the Spot-Lock label on the Indicator Panel is illuminated when Spot-Lock is engaged. To engage Spot-Lock press the Spot-Lock button, to disengage, press the Spot-Lock button again. When engaging Spot-Lock, a tone will be emitted. When disengaging Spot-Lock with the Spot-Lock button, no tone will be emitted. Steering the motor with the Foot Pedal or adjusting the speed using the Speed Knob will cancel Spot-Lock and a High-Low, High-Low, High-Low tone will be emitted. Spot-Lock can be engaged in Normal and Ulterra Modes. Spot-Lock can also be controlled with the remote. For more specific directions on how to use Spot-Lock, please refer to either the i-Pilot or i-Pilot Link Manual.

Steer Right/Steer Left

The Steer Right and Steer Left buttons are located at the bottom of the Foot Pedal. They function to steer right and left when the Foot Pedal is operating in Normal Mode. The amber light on the Indicator Panel will not be illuminated when in Normal Mode. Holding the Steer Right or Steer Left buttons down will continue to steer the motor to the left or right. Small steering changes of less than one degree can be made by quickly tapping the Steer Right and Steer Left buttons.

CAUTION

The steering system is designed to turn your motor 360 degrees. Be careful to avoid over-wrapping the Coil Cord around the trolling motor Shaft.

Trim Down/Trim Up

The Trim Down and Trim Up buttons are located at the bottom of the Foot Pedal. The Trim Down button trims the motor down and the Trim Up button trims the motor up. Their function is to trim the motor when the Foot Pedal is operating in Ulterra Mode. The amber light on the Indicator Panel will be illuminated during Ulterra Mode.

WARNING

When trimming the motor, keep fingers clear of all hinges, pivot points and all moving parts. When stowing and deploying the motor, ensure that it doesn't contact the boat, trailer, or any other obstruction.

Prop ON/OFF

The Prop ON/OFF button is located in the middle, at the bottom of the Foot Pedal. It functions to turn the Prop on and off when the Foot Pedal is operating in Normal Mode. The amber light on the Indicator Panel will not be illuminated when in Normal Mode. The Prop will turn on when pressure is applies and turn off when pressure to the button is removed.

Stow/Deploy

The Stow/Deploy button is located in the middle, at the bottom of the Foot Pedal. It functions to stow and deploy the motor when the Foot Pedal is operating in Ulterra Mode. The amber light on the Indicator Panel will be illuminated during Ulterra Mode. To stow the motor, when it is deployed, press the Stow/Deploy button. To deploy the motor, when it is

WARNING

When stowing or deploying the motor, keep fingers clear of all hinges, pivot points and all moving parts. When stowing and deploying the motor, ensure that it doesn't contact the boat, trailer, or any other obstruction.

stowed, double press the Stow/Deploy button. When stowing and deploying the motor, it automatically disables the operational function of the Foot Pedal or paired remote. "Motor Stowed" or "Motor Deploying" will be displayed on the screen of any applicable remote while the specific action is occurring. The Prop is also disabled when the motor is stowed and deployed.

WARNING

When the motor is being transported, it is important to always stow the Motor and make sure it is locked in place. A secure stow holds the motor in place during transportation when it is subject to high levels of shock and vibration. Failure to stow the motor may result in injury or damage to the unit.

Constant

The Constant button CON is located on the left side of the Foot Pedal, towards the bottom, right below the AutoPilot button. It functions to toggle the motor between Constant Motor Operation and Momentary Motor Operation. The green light CONSTANT on the Indicator Panel will be illuminated when the motor is in Constant Motor Operation. In Constant Mode, the propeller will continually run, regardless of whether or not force is being applied to the Momentary button or Prop ON/OFF button. While in Constant Motor Operation, the propeller will run continuously at the speed set by the Speed Control knob, or by the i-Pilot or i-Pilot Link remote.

If a propeller encounters an obstruction while either in Momentary or Constant Mode, while the propeller is running, the increased electrical current being generated by the obstruction will signal the motor to decrease the power to the propeller to prevent damage. If the current overload is detected for more than 20 seconds, the prop will be disabled to prevent damage to the motor. In this event, the operator can turn the prop back on after being sure that the obstruction has been cleared.

AutoPilot

The AutoPilot AP button is located in the middle, on the left side of the Foot Pedal. Pressing the AutoPilot button toggles the feature on and off. The red light AUTOPILOT SPOT-LOCK on the Indicator Panel is illuminated when this feature is engaged. By default AutoPilot Mode is determined by the remote when AutoPilot is initiated from the Foot Pedal. AutoPilot can be used in both Standard and Ulterra Modes. AutoPilot can also be controlled using the remote. For more specific directions on how to use AutoPilot, please refer to either the i-Pilot or i-Pilot Link Manual.

Momentary

In Momentary Motor Operation, the propeller will only run while downward force is applied to the Momentary button. The Momentary button is on the Toe End of the Heel/Toe Steering pedal. Applying downward pressure to the Momentary button will turn the propeller on. The motor will then run at the speed set by the Speed Knob. Removing downward force to the Momentary button will turn the propeller off. No indicator light is associated with the Momentary button. The Momentary button functions very similar to the Prop ON/OFF button, but works in both Normal and Ulterra Modes.

Heel/Toe Steering

Push the Toe End of the Foot Pedal down to turn right and push the Heel End of the Foot Pedal down to turn left. The position and direction of the Control Head directly corresponds to the position of the motor. You must use your foot on the pedal to control the steering direction during manual operation. The direction of the motor can also be controlled with the remote. Heel/Toe Steering functions the same Normal Mode and Ulterra Mode.

NOTE: The motor will not auto correct to drive straight when it encounters an obstruction.

FOOT PEDAL ADJUSTMENTS

Stowing and Deploying the Motor with the Foot Pedal

Use the following procedure to stow and deploy the motor. Keep in mind that if your motor is stalling at a 45-degree angle when attempting to stow, this indicates that batteries are too low to fully stow the motor. If this occurs, reengage power, deploy the motor, trim the motor to its highest setting, and turn power off until batteries can be recharged. Once batteries are charged, attempt to stow motor again.

1

a. Locate the Indicator Panel at the base of the Mount.

b. Make sure that the motor is on by checking that the green LED next to the System Ready Indicator is on.

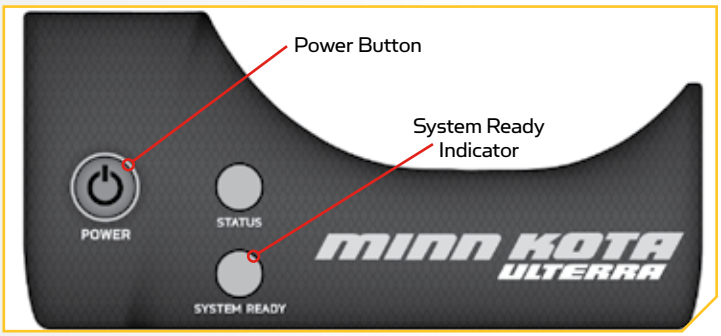

2

c. On the Foot Pedal, press the Mode Button until the amber LED in the center of the Indicator Panel on the Foot Pedal is illuminated. This puts the Foot Pedal in Ulterra Mode.

NOTE: You can only stow and deploy your motor while in Ulterra mode.

d. To deploy the motor, when it is stowed, double press the Stow/Deploy button. To stow the motor, when it is deployed, press the Stow/Deploy button.

WARNING

When stowing or deploying the motor, keep fingers clear of all hinges, pivot points and all moving parts. When stowing and deploying the motor, ensure that it doesn't contact the boat, trailer, or any other obstruction.

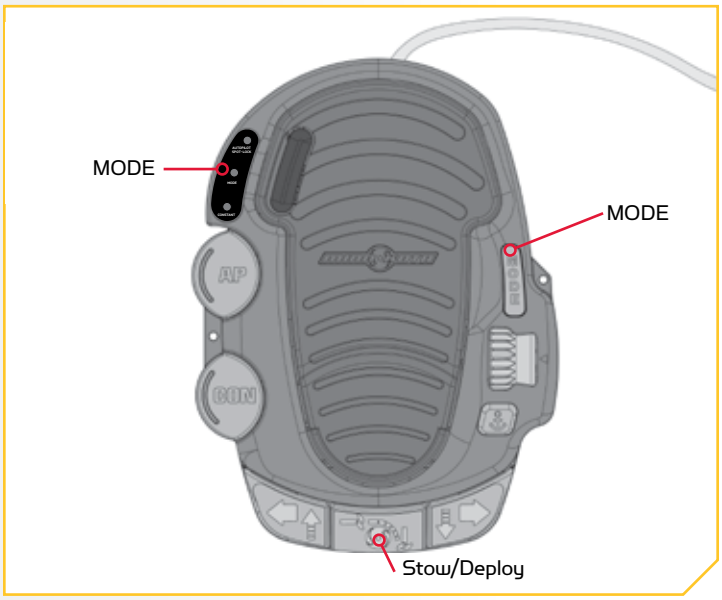

NOTE: The deploy sequence can be stopped at any time pressing the stow/deploy button. The stow sequence can be stopped at any time by pressing either trim button or the stow/deploy button.

Adjusting the Depth of the Motor (Trim) with the Foot Pedal

Once the boat is on the water, it may be necessary to adjust the trim of the lower unit up or down to achieve an optimum depth for motor performance. When setting the depth of the motor, be sure the top of the motor is submerged at least 12" below the surface of the water to avoid churning or agitation of surface water. There will be times when you will need to move your motor up or down depending on how your boat is responding. You can trim up to avoid hitting underwater objects and you can trim down if your prop is coming out of the water. If your motor is equipped with either i-Pilot, or i-Pilot Link, please refer to either the i-Pilot, or i-Pilot Link Owner's Manual to learn how to adjust the trim with the corresponding remote.

When trimming the motor using either a remote or the Foot Pedal, the motor is programmed to operate safely and limit prop rotation when it is within certain limits. The prop will temporarily stop while trimming the motor and resume once trimming is stopped. Trim limits are in place to avoid damage to the unit. An upper trim limit is set 12" from the bottom of the motor mount to the center of the motor. A lower trim limit is set approximately 1.5" from the bottom of the control head to the trim housing. A prop lockout region, defined as 17" from bottom of motor mount to center of motor, is used to eliminate the possibility of the motor contacting the boat hull. All functions with the exception of manual steer and track record are canceled upon trimming into this region.

1

a. On the Foot Pedal, press the MODE button until the amber LED in the center of the Indicator Panel on the Foot Pedal is illuminated. This puts the Foot Pedal in Ulterra Mode.

NOTE: You can only trim your motor while in Ulterra Mode.

⚠ WARNING

When trimming the motor, keep fingers clear of all hinges, pivot points and all moving parts.

b. To trim the motor up, press the Trim Up button located on the bottom, left of the Foot Pedal.

c. To trim the motor down, press the Trim Down button located on the bottom, right of the Foot Pedal.

NOTE: Please be sure the top of the motor is submerged at least 12" below the surface of the water to avoid churning or agitation of surface water.

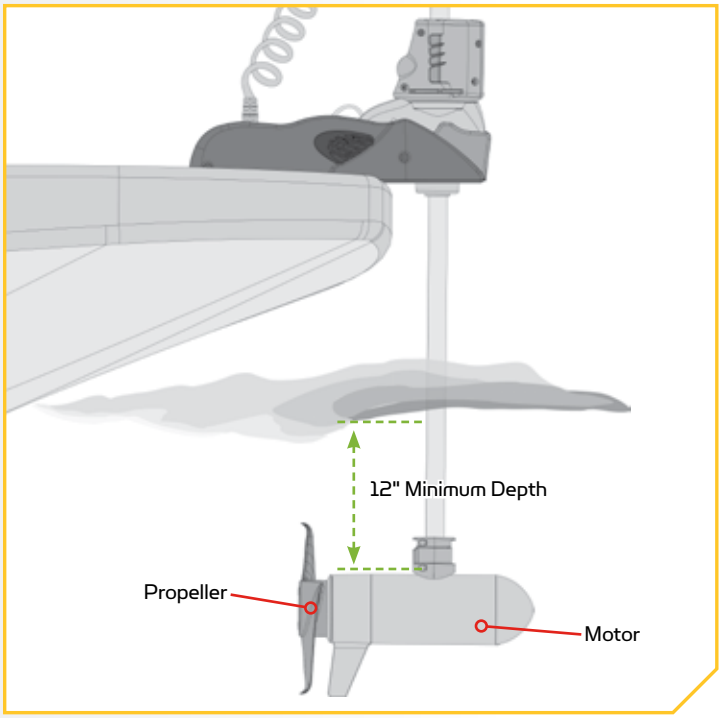

SERVICE & MAINTENANCE

PROPELLER REPLACEMENT

TOOLS AND RESOURCES REQUIRED

- 9/16" Open End Wrench
- Flat Blade Screwdriver

INSTALLATION

1

a. Disconnect the motor from all sources of power prior to changing the propeller.

b. Hold the propeller and loosen the Prop Nut with a pliers or a wrench.

c. Remove the Prop Nut and Prop Washer.

NOTE: If the Drive Pin is sheared or broken, you will need to hold the shaft stationary with a flat blade screwdriver pressed into the slot on the end of the shaft while you loosen the Prop Nut.

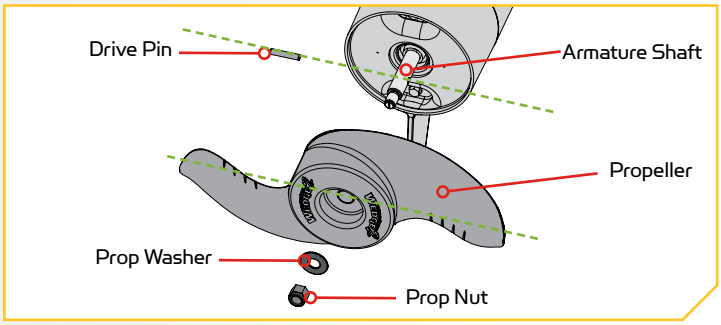

⚠ CAUTION

Disconnect the motor from the battery before beginning any prop work or maintenance.

2

d. Turn the old prop to horizontal and pull it straight off. If drive pin falls out, push it back in.

⚠ CAUTION

If the prop does not readily slide off, take care to not bend the Armature Shaft while removing the prop by pulling the prop evenly off the Armature Shaft.

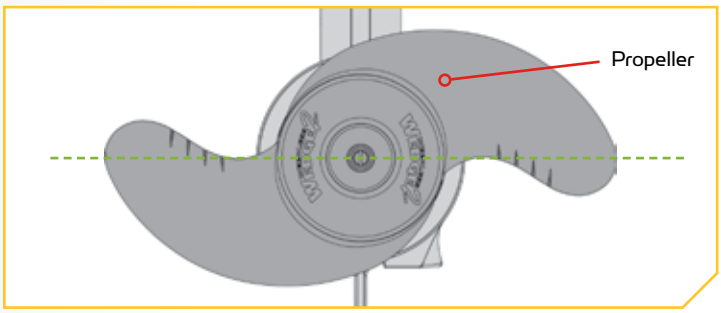

3

e. Align the new Propeller with the Drive Pin.

f. Install the Prop Washer and Prop Nut.

g. Tighten the Prop Nut 1/4 turn past snug at 25-35 in-lbs.

⚠ CAUTION

Do not over tighten as this can damage the prop.

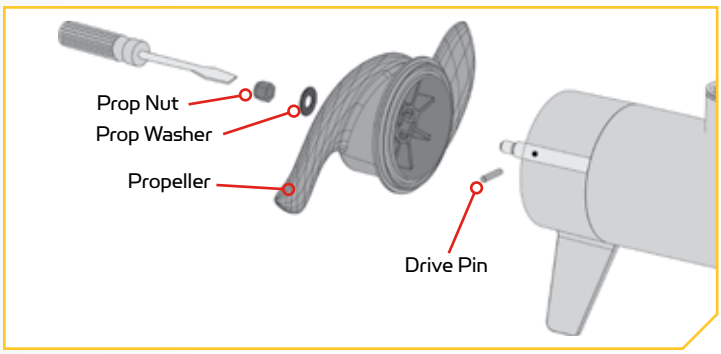

GENERAL MAINTENANCE

- After use, the entire motor should be rinsed with freshwater. This series of motors is not equipped for saltwater exposure.
- The composite shaft requires periodic cleaning and lubrication for proper retraction and deployment. A coating of an aqueous based silicone spray will improve operation.
- The propeller must be inspected and cleaned from weeds and fishing line after every use. Fishing line and weeds can get behind the prop, damage the seals and allow water to enter the motor.
- Verify the prop nut is secure each time the motor is used.
- To prevent accidental damage during transportation or storage, disconnect the battery whenever the motor is off of the water. For prolonged storage, lightly coat all metal parts with an aqueous based silicone spray.
- For maximum battery life recharge the battery(s) as soon as possible after use. For maximum motor performance restore battery to full charge prior to use.
- Keep battery terminals clean with fine sandpaper or emery cloth.
- The propeller is designed to provide weed free operation with very high efficiency. To maintain this top performance, the leading edge of the blades must be kept smooth. If they are rough or nicked from use, restore to smooth by sanding with fine sandpaper.
- Keep the Foot Pedal well dry and clean. Debris that gets in the Foot Pedal can cause interference of pedal operation. It is recommended to use compressed air to clean the foot pedal after each use.

TROUBLESHOOTING

1. Motor fails to run or lacks power:
   - Check battery connections for proper polarity.
   - Make sure the battery is charged.
   - Make sure terminals and wires are clean and corrosion free. Use fine sandpaper or emery cloth to clean terminals.
   - Check circuit protection devices.
   - Check battery water level. Add water if needed.
2. Motor loses power after a short running time:
   - Check battery charge. If low, restore to full charge, or replace.
3. You experience prop vibration during normal operation:
   - Remove and rotate the prop 180°. See removal instructions in the Propeller Replacement Section. Replace prop if worn.
4. Experiencing interference with your fish finder:
   - You may, in some applications, experience interference in your depth finder display. We recommend that you use a separate deep cycle marine battery for your trolling motor and that you power the depth finder from the starting/cranking battery. If problems still persist, call our service department at 1-800-227-6433.
5. Motor contacts an object while trimming causing an audible tone:
   - Reverse the direction of trimming to clear motor from obstruction.
6. Motor contacts an object while stowing causing an audible tone:
   - Reverse the current cycle by pressing the stow/deploy button to clear from obstruction.
7. Motor fails to trim:
   - Check main lift belt tension per the Adjustments section.

8. Motor fails to stow or deploy:
   - Check for obstructions preventing the motor from deploying or stowing.
   - Ensure that manual tilt knob is engaged. See the Emergency Stow Procedure section for details.
   - Check charge state of trolling motor batteries. If trolling motor battery icon on remote is flashing, battery charge is too low for operation.
9. Prop will not turn on:
   - Ensure batteries are sufficiently charged.
   - For safety reasons there is a prop lock out region (approx. 15" from mounting base to lower unit centerline). Ensure that the lower unit is not in this region.

NOTE: For all other malfunctions, visit an Authorized Service Center. You can search for an Authorized Service Center in your area by visiting our Authorized Service page, found online at minnkotamotors.com, or by calling our customer service number at 800-227-6433.

FOR FURTHER TROUBLESHOOTING AND REPAIR

We offer several options to help you troubleshoot and/or repair your product. Please read through the options listed below.

Buy Parts Online

You can buy parts on-line directly from our website at minnkotamotors.com. Orders confirmed by 12 noon central time will ship same day if in stock. Orders after 12 noon central time will ship the next business day if in stock.

Frequently Asked Questions

We have FAQs available on our website to help answer all of your Minn Kota questions. Visit minnkotamotors.com and click on "Frequently Asked Questions" to find an answer to your question.

Call Us (for U.S. and Canada)

Our consumer service representatives are available Monday – Friday between 7:00 a.m. – 4:30 p.m. CST at 800-227-6433. If you are calling to order parts, please have the 11-character serial number from your product, specific part numbers, and credit card information available. This will help expedite your call and allow us to provide you with the best consumer service possible. You can reference the parts list located in your manual to identify the specific part numbers.

Email Us

You can email our consumer service department with questions regarding your Minn Kota products. To email your question, visit minnkotamotors.com and click on "Support".

Authorized Service Centers

Minn Kota has over 300 authorized service centers in the United States and Canada where you can purchase parts or get your products repaired. Please visit our Authorized Service Center page on our website to locate a service center in your area.

Scan to visit Minn Kota service online.

COMPLIANCE STATEMENTS

ENVIRONMENTAL COMPLIANCE STATEMENT

It is the intention of JOME to be a responsible corporate citizen, operating in compliance with known and applicable environmental regulations, and a good neighbor in the communities where we make or sell our products.

WEEE DIRECTIVE

EU Directive 2002/96/EC "Waste of Electrical and Electronic Equipment Directive (WEEE)" impacts most distributors, sellers, and manufacturers of consumer electronics in the European Union. The WEEE Directive requires the producer of consumer electronics to take responsibility for the management of waste from their products to achieve environmentally responsible disposal during the product life cycle.

WEEE compliance may not be required in your location for electrical & electronic equipment (EEE), nor may it be required for EEE designed and intended as fixed or temporary installation in transportation vehicles such as automobiles, aircraft, and boats. In some European Union member states, these vehicles are considered outside of the scope of the Directive, and EEE for those applications can be considered excluded from the WEEE Directive requirement.

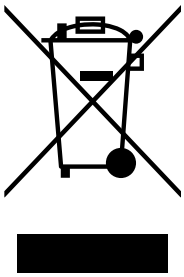

This symbol (WEEE wheelie bin) on product indicates the product must not be disposed of with other household refuse. It must be disposed of and collected for recycling and recovery of waste EEE. Johnson Outdoors Inc. will mark all EEE products in accordance with the WEEE Directive. It is our goal to comply in the collection, treatment, recovery, and environmentally sound disposal of those products; however, these requirements do vary within European Union member states. For more information about where you should dispose of your waste equipment for recycling and recovery and/or your European Union member state requirements, please contact your dealer or distributor from which your product was purchased.

DISPOSAL

Minn Kota motors are not subject to the disposal regulations EAG-VO (electric devices directive) that implements the WEEE directive. Nevertheless never dispose of your Minn Kota motor in a garbage bin but at the proper place of collection of your local town council.

Never dispose of battery in a garbage bin. Comply with the disposal directions of the manufacturer or his representative and dispose of them at the proper place of collection of your local town council.

⚠ WARNING

This product contains chemicals known to the State of California to cause cancer and birth defects or other reproductive harm.

REGULATORY COMPLIANCE INFORMATION

i-Pilot Equipped Motors

For regulatory information on motors that come factory installed with i-Pilot, please refer to the i-Pilot Owner's Manual online at minnkotamotors.com.

i-Pilot Link Equipped Motors

For regulatory information on motors that come factory installed with i-Pilot Link, please refer to the i-Pilot Link Owner's Manual online at minnkotamotors.com.

FCC COMPLIANCE

This device complies with Part 15 of the FCC rules.

Operation is subject to the following two conditions:

1. This device may not cause harmful interference.
2. This device must accept any interference that may be received, including interference that may cause undesired operation.

Changes or modifications not expressly approved by Johnson Outdoors Marine Electronics, Inc. could void the user's authority to operate this equipment.

NOTE: This equipment has been tested and found to comply with the limits for a Class B digital device, pursuant to part 15 of the FCC Rules. These limits are designed to provide reasonable protection against harmful interference in a residential installation. This equipment generates, uses and can radiate radio frequency energy and, if not installed and used in accordance with the instructions, may cause harmful interference to radio communications. However, there is no guarantee that interference will not occur in a particular installation. **If this equipment does cause harmful interference to radio or television reception, which can be determined by turning the equipment off and on, the user is encouraged to try to correct the interference by one or more of the following measures:**

- Reorient or relocate the receiving antenna.
- Increase the separation between the equipment and receiver.
- Connect the equipment into an outlet on a circuit different from that to which the receiver is connected.
- Consult the dealer or an experienced radio/TV technician for help.

INDUSTRY CANADA COMPLIANCE

This product meets the applicable Industry Canada technical specifications. Operation is subject to the following two conditions: (1) this device may not cause interference, and (2) this device must accept any interference, including interference that may cause undesired operation of the device.

Changes or modifications not expressly approved by Johnson Outdoors Marine Electronics, Inc. could void the user's authority to operate this equipment.

ENVIRONMENTAL RATINGS

Ambient operating temperature range: -10C to 50C
Ambient operating humidity range: 5% to 95%
Maximum operating altitude: 10,000 feet

ULTERRA COMPLIANCE

i-Pilot Equipped Motors

- IC: 4397A-ULTERRAIP15
- FCC ID: T62-ULTERRAIP15

i-Pilot Link Equipped Motors

- IC: 4397A-ULTERRA20
- FCC ID: T62-ULTERRA20

RADIO OPERATION

CONTROLLER

- Frequency band: 915 MHz to 921 MHz
- Maximum RF power transmitted: +27 dBm

REMOTE

- Frequency band: 864 MHz to 870 MHz
- Maximum RF power transmitted: +27 dBm

PARTS DIAGRAM & PARTS LIST

ULTERRA

80/112 LBS THRUST - 24/36 VOLT - 45"/60"/72" SHAFT

The parts diagram and parts list provides Minn Kota® WEEE compliance disassembly instructions. For more information about where you should dispose of your waste equipment for recycling and recovery and/or your European Union member state requirements, please contact your dealer or distributor from which your product was purchased. Tools required, but not limited to: flat head screwdriver, Phillips screwdriver, socket set, pliers, wire cutters.

ULTERRA MOTOR

Motor Parts Diagram

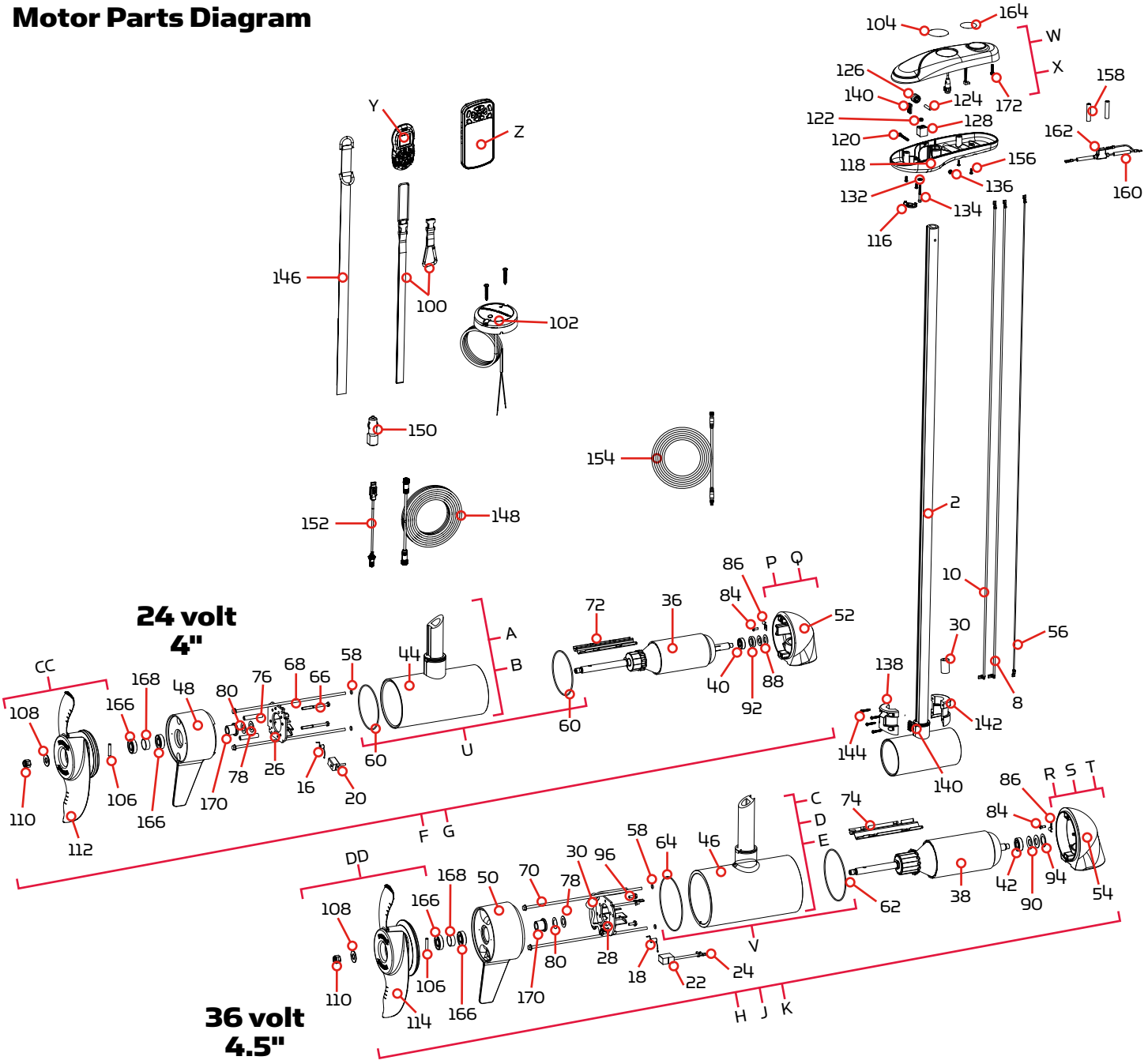

Motor Parts List

Assembly	Part #	Description	Quantity
A	2777098	CTR HSG ASY, CB, 80#, FW, 45" TUBE *TUBE*	1
B	2777099	CTR HSG ASY, CB, 80#, FW, 60" TUBE *TUBE*	1
C	2777248	CTR HSG ASY, CB, 112#, FW, 45" TUBE *TUBE*	1
D	2777249	CTR HSG ASY, CB, 112#, FW, 60" TUBE *TUBE*	1
E	2777250	CTR HSG ASY, CB, 112#, FW, 72" TUBE *TUBE*	1
F	2777016	MTR/TUBE ASSY 80# 45" US2 *MOTOR & TUBE*	1
G	2777015	MTR/TUBE ASSY 80# 60" US2 *MOTOR & TUBE*	1
H	2777086	MTR/TUBE ASSY 112# 45" US2 *MOTOR & TUBE*	1
J	2777085	MTR/TUBE ASSY 112# 60" US2 *MOTOR & TUBE*	1
K	2777087	MTR/TUBE ASSY 112# 72" US2 *MOTOR & TUBE*	1
CC	1378132	80# THRUST PROP KIT	1
DD	1378160	112# THRUST PROP KIT	1
P	9421-287	PLN END HSG/TRANSDUCER ASY 4.0 *80LB THRUST* *45*	1
Q	9421-290	PLN END HSG/TRANSDUCER ASY 4.0 *80LB THRUST* *60*	1
R	9421-244	PLN END HSG/TRANSDUCER ASY 4.5 *112LB THRUST* *45*	1
S	9421-246	PLN END HSG/TRANSDUCER ASY 4.5 *112LB THRUST* *60*	1
T	9421-247	PLN END HSG/TRANSDUCER ASY 4.5 *112LB THRUST* *72*	1
U	2889460	SEAL & O-RING KIT *80LB THRUST*	1
V	2881450	SEAL & O-RING KIT 112 *112LB THRUST*	1
W	2774162 ♦	MOTOR KIT, iPILOT 1.6 ULTERRA *i-PILOT RECEIVER*	1
X	2774166 ♦	MOTOR KIT, iPILOT 3.0 ULTERRA *i-PILOT LINK RECEIVER*	1
Y	2994075 ♦	REMOTE ASSY, IPILOT 1.6	1
Z	2994076 ♦	REMOTE ASSY, IPILOT LINK *LINK ONLY*	1
Item	**Part #**	**Description**	**Quantity**
2	✖	TUBE-COMP,BLK,60", w/1/4" WALL	1
	✖	TUBE-CMP,BLK,60",1/4"WALL *60in* *A SKU*	1
	✖	TUBE-COMP,BLK,45", w/1/4" WALL	1
	✖	TUBE-CMP,BLK,45",1/4"WALL	1
	✖	TUBE-COMP,BLK,72",w/1/4" WALL	1
▲	✖	SEAL,BUNG UPPER,FW	1
▲	✖	SEAL,BUNG LOWER	1
8	640-022	LEADWIRE BLK 10 AWG 72.5 XLP *4* *80LB THRUST* *60*	1
	640-027	LEADWIRE BLK 10AWG 56 1/2 XLP *4* *80LB THRUST* *45*	1
	640-045	LEADWIRE BLK 10AWG 76 1/2" GPT *4.5* *112LB THRUST* *60*	1
	640-049	LEADWIRE BLK 10AWG 88.50" GPT *4.5* *112LB THRUST* *72*	1
	640-040	LEADWIRE BLK 10AWG 62 1/4" GPT *4.5* *112LB THRUST* *45*	1

✖ This part is included in an assembly and cannot be ordered individually.
▲ Not shown on Parts Diagram.
♦ May only be available with i-Pilot or i-Pilot Link.

PARTS DIAGRAM & PARTS LIST

Item	Part #	Description	Quantity
10	640-126	LEADWIRE RED 10AWG 71" XLP *4* *80LB THRUST* *60*	1
	640-118	LEADWIRE RED 10 AWG 56 XLP *4* *80LB THRUST* *45*	1
	640-145	LEADWIRE RED 10AWG 75 7/8" GPT *4.5* *112LB THRUST* *60*	1
	640-149	LEADWIRE RED 10AWG 88" GPT *4.5* *112LB THRUST* *72*	1
	640-140	LEADWIRE RED 10AWG 61 1/2" GPT *4.5* *112LB THRUST* *45*	1
▲	✖	BRUSH HOLDER *4* *80LB THRUST*	2
▲	✖	BRUSH HOLDER *4.5* *112LB THRUST*	2
16	975-041	SPRING - TORSION *4* *80LB THRUST*	2
18	975-045	SPRING-TORSION *4.5* *112LB THRUST*	2
20	188-094	BRUSH W/TERMINAL *4* *80LB THRUST*	2
22	188-095	BRUSH *4.5* *112LB THRUST*	2
24	2260731	TERMINAL 1/4" MALE TAB-THREE *4.5* *112LB THRUST*	2
26	738-004	BRUSH PLATE-4" terminal *4* *80LB THRUST*	1
28	738-011	BRUSH PLATE *4.5* *112LB THRUST*	1
30	2307312	BEAD-FERRITE *A SKU* *M SKU* *4.5* *112LB THURST*	1
▲	✖	RIVET-.25" *4* *80LB THRUST*	6
▲	2260730	CONNECTOR 1/4 MALE TAB QD *4* *80LB THRUST*	2
36	2-100-214	ARM ASSY 24V 4" 80# (WW2) *4* *80LB THRUST*	1
38	2-100-245	ARMATURE ASY 4.5"LWR UNIT *4.5* *112LB THRUST*	1
40	140-010	BEARING - BALL *4* *80LB THRUST*	1
42	140-014	BEARING-BALL 6000 *4.5* *112LB THRUST*	1
44	✖	CTR HSG ASY 4.0 FW -MGNTZ *4* *80LB THRUST* *ASSEMBLY A OR B*	1
46	✖	CTR HSG ASY 4.5" MAG FW CB TER *4.5* *112LB THRUST* *ASSEMBLY C, D OR E*	1
48	2-300-170	BRUSH END HSG ASY 4.0 FW *4* *80LB THRUST*	1
50	2-300-155	BRUSH END HSG ASY 4.5" FW *4.5* *112LB THRUST*	1
52	✖	PLAIN END HSG-PNTD-4"US2.5 CB *4* *80LB THRUST* *ASSEMBLY P OR Q*	1
54	✖	PLN END HSG 4.5" US2.5 PNT FW *4.5* *112LB THRUST* *ASSEMBLY R, S OR T*	1
56	640-316	LEADWIRE BROWN 18 AWG 71" GPT *4* *80LB THRUST* *60*	1
	640-315	LEADWIRE BROWN 18 AWG 62" GPT *4* *80LB THRUST* *45*	1
	640-317	LEADWIRE BROWN 18 AWG 86" GPT *4.5* *112LB THRUST* *72*	1
	640-315	LEADWIRE BROWN 18 AWG 62" GPT *4.5* *112LB THRUST* *45*	1
58	701-009	O-RING *THRU BOLT* *80LB THRUST* *112LB THRUST* *4* *4.5*	2
60	701-043	O-RING *4* *80LB THRUST*	2
62	701-098	O-RING, 98MM X 2MM *4.5* *112LB THRUST*	1
64	701-103	O-RING,103MM X 3.00MM, 70 BUNA *4.5* *112LB THRUST*	1
66	830-027	SCREW - SELF-THREAD 10-32X2.25 *4* *80LB THRUST*	2
68	830-095	THRU BOLT 12-24 x 9.79 *4* *80LB THRUST*	2
70	830-094	THRU BOLT 12-24 X10.31 *4.5* *112LB THRUST*	2

✖ This part is included in an assembly and cannot be ordered individually.
▲ Not shown on Parts Diagram.
♦ May only be available with i-Pilot or i-Pilot Link.

Item	Part #	Description	Quantity
72	582-013	CLIP, RETAINING SHORT *4* *80LB THRUST*	1
74	582-016	CLIP-RETAINING, SONAR *4.5* *112LB THRUST*	1
76	973-025	SPACER - BRUSHPLATE *4* *80LB THRUST*	2
78	990-051	WASHER - STEEL THRUST	1
80	990-052	WASHER - NYLATRON	1
84	2302104	SCREW-#6-20 X 3/8 THD CUTS,RIE	1
86	230-038	CABLE CLAMP	1
88	992-010	WASHER - BELLEVILLE	2
90	992-011	WASHER-BELLEVILLE *4.5* *112LB THRUST*	2
92	990-045	SPACER - THRUST	1
94	990-011	WASHER-SHIM OD 1",ID.630"SS *4.5* *112LB THRUST*	1
96	2053410	SCREW-#8-32 X 1/2 TRI-LOBE HEX *4.5* *112LB THRUST*	2
▲	2207113	MANUAL,INSTALL GUIDE, ULT.	1
100	2390800 ♦	LANYARD w/CARABINEER,IP REMOTE	1
102	2996400 ♦	HEADING SENSOR ASSEMBLY	1
104	2205508 ♦	DECAL-GENERIC, PUSH BTN TOP FW	1
106	2262658	PIN-DRIVE 1" X 3/16" S/S	1
108	2091701	WASHER-PROP (LARGE) MAX101	1
110	2093101	NUT-PROP,NYLOC,LG,MX101 3/8 SS	1
112	2331160	PROP-WW2 (4") w/ADP.RING	1
114	2341160	PROP-WW2 (4.5) w/ADP.RING	1
116	2224704	INSERT-PLUG, BLK,I PILOT *LARGE HOLE*	1
	2224700	INSERT-PLUG *SMALL HOLE*	1
118	2202506	CONTROL BOX BOTTOM, FW	1
120	2383407	SCREW-#10-24 X 2" PPH ZINC	1
122	2333101	NUT-HEX #10-24 UNC-2B NYL SS	1
124	2202635	PIN-DOWEL, 1/4" OD SS	1
126	2202335	PULLEY, BELT, TOP	1
128	2202800	BLOCK, BELT	1
132	2201721	WASHER-#10 SAE, SS	1
134	2203411	SCREW-#10-24,SHCS,SS, RIE 4606	1
136	2333101	NUT-HEX #10-24 UNC-2B NYL SS	1
138	2201505	COLLAR, BELT CLAMP	1
140	2200800	BELT-RACK, LOWER	1
142	2201500	COLLAR, CLAMP	1
144	3393480	SCREW-#10 X 1.0" PPH HI-LO SS	4
146	2203800	STRAP, HOLD DOWN	1
148	490389-1♦	CABLE, ETH (M12-M-M12-F, 30'	1

✖ This part is included in an assembly and cannot be ordered individually.
▲ Not shown on Parts Diagram.
♦ May only be available with i-Pilot or i-Pilot Link.

PARTS DIAGRAM & PARTS LIST

Item	Part #	Description	Quantity
150	2375901♦	ADAPTER, USB DC POWER LINK	1
152	2373241 ♦	CABLE, USB REMOTE CHARGER LINK	1
154	2211415	CABLE-EXTENSION, PD/AP 110"	1
156	2372100	SCREW-#8-18 X 5/8 THD* (SS	4
158	2065400	WIRE INSULATOR-LGE 1-3/4,BLUE	2
160	2375400	SHRINK TUBE-1/4OD X 1-3/4	2
162	2218200	FUSE HOLDER ASSEMBLY	1
164	2395520♦	DECAL, DOMED IPILOT FW	1
166	888-025	SEAL	2
168	725-095	PAPER TUBE	1
170	144-017	BEARING	1
172	2203403	SCREW-#6 X 1.0 BRASS HI-LO	1
▲	2256300	TIE WRAP-5.5" BLACK	2

✖ This part is included in an assembly and cannot be ordered individually.
▲ Not shown on Parts Diagram.
♦ May only be available with i-Pilot or i-Pilot Link.

ULTERRA STEERING HOUSING & TRIM HOUSING

Steering Housing & Trim Housing Parts Diagram

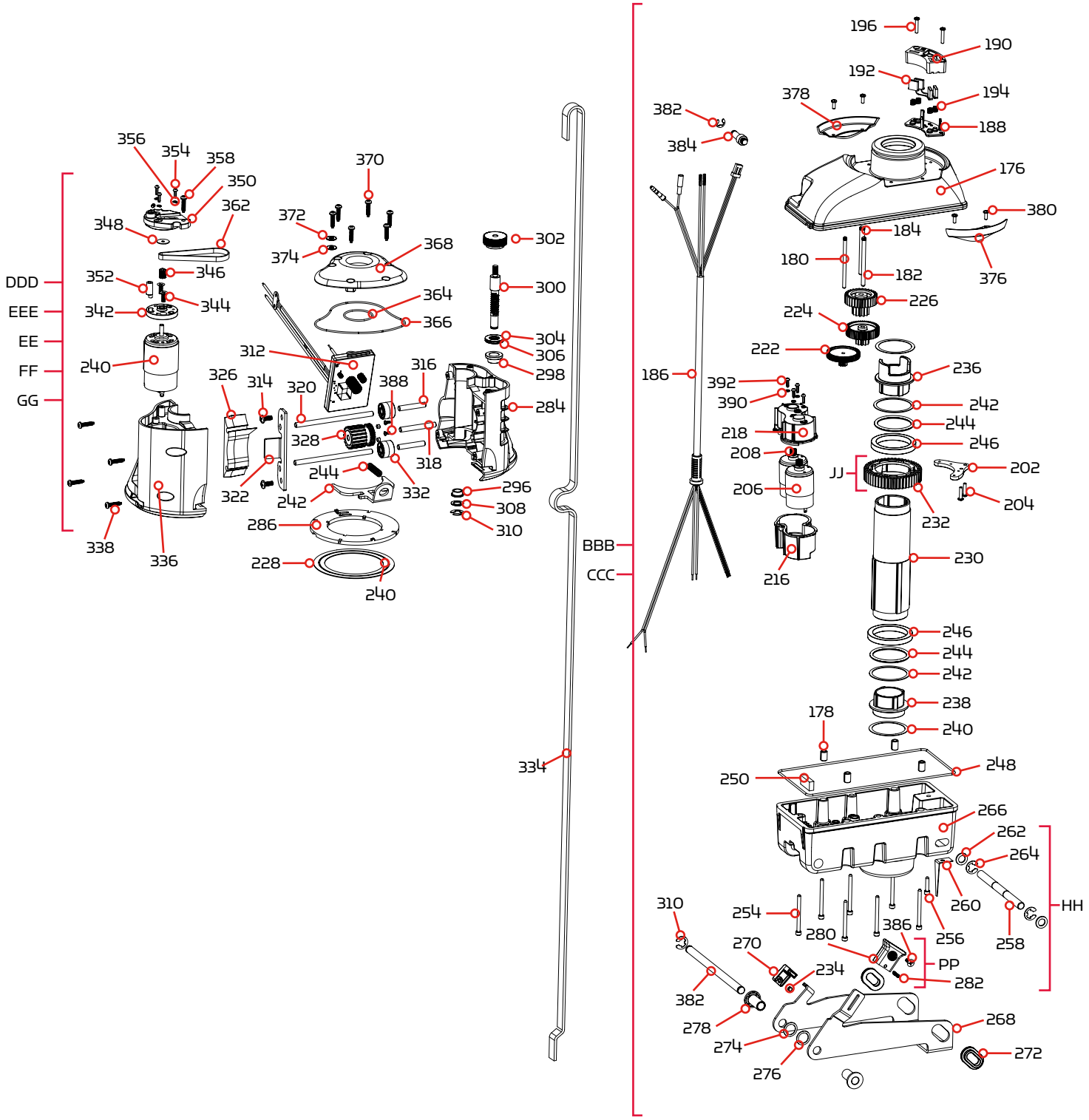

Steering Housing & Trim Housing Parts List

Assembly	Part #	Description	Quantity
BBB	2996521	ASM, STEERING 24V *80LB THRUST*	1
CCC	2996522	ASM, STEERING 36V *112 LB THRUST*	1
DDD	2997803	ASSY,TRIM MODULE, FW, 60"	1
EEE	2997820	ASSY,TRIM MODULE, FW, 72"	1
EE	2997807	ASSY,TRIM MODULE, FW, 45"	1
FF	2997827	ASSY,TRIM MOD "M",FW, 45" *M SKU* *EUROPE ONLY*	1
GG	2997823	ASSY,TRIM MOD "M",FW, 60" *M SKU* *EUROPE ONLY*	1
HH	2774201	TILT BRACKET ASSEMBLY	1
JJ	2772200	OUTPUT GEAR W/MAGNETS	1
PP	2770100	RELEASE KNOB WITH SCREW KIT	1
Item	**Part #**	**Description**	**Quantity**
176	✖	STEERING HSG COVER FW BLK	1
178	✖	PIN-ROLL 5/16" X 1/2"	4
180	✖	SHAFT-GEAR, FIRST CLUSTER	1
182	✖	SHAFT-GEAR,INTERMED.CLUSTER	1
184	✖	SHAFT-GEAR, THIRD CLUSTER	1
186	✖	LEADWIRE,STEERING MTR, 8 COND.	1
188	✖	INSULATOR, BLOCK-BRUSH	1
190	✖	BLOCK-BRUSH, SLIPRING	1
192	✖	BRUSH SHUNT ASSEMBLY	2
194	✖	SPRING-COMPRESSION, BRUSH	4
196	2203408	SCREW-#6-32 X .75" PPH, NYLON	2
202	2201920	BRACKET-SENSOR, STEERING HSG	1
204	2303412	SCREW-#6-20 X 5/8 SELF TAP	2
206	✖	MOTOR, STEERING 36V FW T2 *112LB THRUST*	1
	✖	MOTOR, STEERING 24V T2 *80LB THRUST*	1
208	2322215	GEAR-PINION, DR.HSG, STAGE 1	1
216	2322520	CASE-MOTOR,STRG HSG,TOP	1
218	2322525	CASE-MOTOR,STRG HSG,BTM	1
222	2322210	GEAR & PINION, DR.HSG, STAGE 2	1
224	2302250	GEAR & PINION,DR. HSG, STAGE 3	1
226	2302255	GEAR & PINION,DR. HSG, STAGE 4	1
230	2322030	TUBE-OUTPUT, MACHINED	1
232	2322200	GEAR-OUTPUT	1
234	2378448	MAGNET-.187X.125 NCKL PLT(N/A)	4
236	2201510	COLLAR-DRIVE, OUTPUT TUBE	1

✖ This part is included in an assembly and cannot be ordered individually.
▲ Not shown on Parts Diagram.
♦ May only be available with i-Pilot or i-Pilot Link.

Item	Part #	Description	Quantity
238	2321510	COLLAR-DRIVE,BOTTOM	1
240	2321704	WASHER-THRUST, STEERING	2
242	2321720	SHIM,O-RING	2
244	2324608	O-RING,224,PD PRO STR HSG	2
246	2327308	BEARING-BALL,SEALED,6809-2RS	2
248	2324604	O-RING, CASE SEAL	1
250	2308601	BREATHER FILTER, DR.HOUSING	1
254	2323408	SCREW-#8-32 X 2.0 SHCS SS	7
256	2323410	SCREW-#8-32 X .75 SHCS SS	1
258	2202626	PIN-LATCH, SS	1
260	2322702	SPRING, LATCH PIN SS	2
262	2321702	WASHER-FLAT .375 NYLON	2
264	2263011	E-RING 3/8 DIA. SHAFT*	2
266	✖	HOUSING-STEERING, BTM, FW	1
268	2201911	BRACKET, TILT, ZP	1
270	2208600	HOLDER-MAGNET w/MAGNET	1
272	2207305	BUSHING, LATCH PIN	2
274	2201730	WASHER-FLAT, .56 ID NYLON *BLACK*	1
276	2201731	WASHER-FLAT, NYLON *WHITE*	1
278	2207310	BUSHING,STEERING HSG, PIVOT	2
280	2200100	KNOB, TILT RELEASE	1
282	2383463	SCREW-#6-32 X .625"SET SS	1
284	✖	HOUSING-TRIM, GEAR SIDE	1
286	✖	CARRIER, SLIPRING CONTACTS	1
288	✖	RING-CONTACT, SLIPRING LARGE	1
290	✖	RING-CONTACT, SLIPRING SMALL	1
292	✖	HANDLE, TRIM HSG RELEASE, ZP	1
294	✖	SPRING-5/16" OD, SS	1
296	✖	BUSHING, TRIM, BOTTOM	1
298	✖	BUSHING-HAT 1/2"SHFT BRNZ	1
300	✖	SHAFT-WORM	1
302	✖	PULLEY, TRIM JACKSHAFT, MACH.	1
304	✖	BEARING-THRUST, NEEDLE	1
306	✖	WASHER-THRUST, 1/2"	2
308	✖	WASHER-THRUST, 3/8"	1
310	✖	E-RING 3/8 DIA. SHAFT*	2
312	✖	BOARD ASSY, WIRELESS TRIM	1
	✖	BOARD ASSY, WIRELESS TRIM “M”	1

✖ This part is included in an assembly and cannot be ordered individually.
▲ Not shown on Parts Diagram.
♦ May only be available with i-Pilot or i-Pilot Link.

PARTS DIAGRAM & PARTS LIST

Item	Part #	Description	Quantity
314	✖	SCREW-#4-24 X 1/4 PHCR SS TY B	2
316	✖	PIN, BELT PULLEY	2
318	✖	PIN, 2' X 1/4"	1
320	✖	PIN-DOWEL, 1/8"	2
322	✖	BRACKET, DRIVE BLOCK	1
326	✖	BLOCK, TUBE DRIVE	1
328	✖	GEAR/PULLEY-WORM, CLUSTER ASM	1
▲	✖	MAGNET-.187X.125 NCKL PLT(N/A)	2
332	✖	PULLEY, BELT, TOP	2
334	2770816	BELT-LIFT 45"	1
	2770818	BELT-LIFT 60"	1
	2770819	BELT-LIFT 72"	1
336	✖	HOUSING-TRIM, MOTOR SIDE	1
338	✖	SCREW-#10X.75"PPH HI-LO SS	4
340	✖	MOTOR, TRIM	1
342	✖	PLATE-ADAPTER, LIFT MOTOR	1
344	✖	SCREW-M4 X 10 PFH, ZP	2
346	✖	PULLEY, LIFT MOTOR, MACHINED	1
348	✖	WASHER-#6, .625 OD, ZP STEEL	1
350	✖	PLATE-MOTOR	1
352	2058411	TENSIONER-BELT (VANTAGE)	1
354	2053422	SCREW-M3-.5 X 10 PPH, ZPS	3
356	2051710	LOCKWASHER-SPLIT, 3MM, ZP	3
358	2053420	SCREW-SET-#8-32 X 1/4" S/S	1
362	2200810	BELT-TRIM	1
364	2204601	O-RING, TRIM HOUSING	1
366	2204600	O-RING, TRIM HSG COVER, BLK	1
368	2206410	COVER, TRIM HOUSING	1
370	✖	SCREW-#10X.75"PPH HI-LO SS	6
372	3391732	WASHER, SEALING	6
374	3394602	WASHER-FLAT #8 SS	6
382	2202601	PIN-PIVOT, DRIVEHOUSING, ZP	1
376	2205905	ADAPTER, STEERING HSG RIGHT	1
378	2205900	ADAPTER, STEERING HSG LEFT	1
380	2332103	SCREW-#6-20 X 3/8 THD*(SS)	4
382	2263006	E-RING, 5/16, S/S GAS ASSIST	1
384	2202902	STANDOFF, OIL DAMPENER	1
386	2203407	SCREW-#6-32 X .625" PFH, SS	1

✖ This part is included in an assembly and cannot be ordered individually.
▲ Not shown on Parts Diagram.
♦ May only be available with i-Pilot or i-Pilot Link.

Item	Part #	Description	Quantity
388	2373440	SCREW-#4-24 X 1/4 PHCR SS	2
390	2051710	SPLIT LOCK WASHER 3MM	4
392	2372103	SCREW-X6 X .375 PLASTITE SS	4

✖ This part is included in an assembly and cannot be ordered individually.
▲ Not shown on Parts Diagram.
♦ May only be available with i-Pilot or i-Pilot Link.

ULTERRA FOOT PEDAL

Foot Pedal Parts Diagram

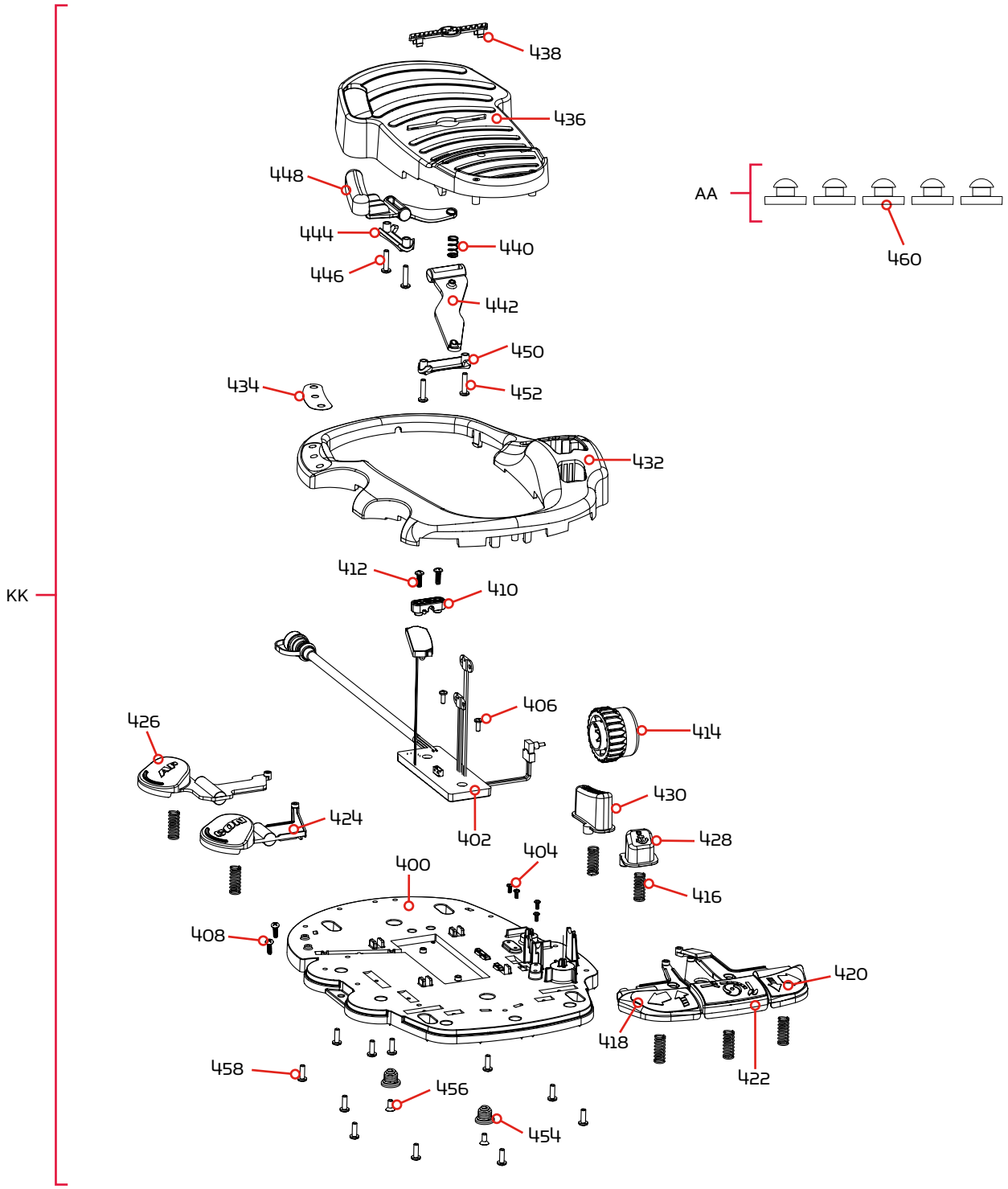

Foot Pedal Parts List

Assembly	Part #	Description	Quantity
KK	2994740	FOOT PEDAL ASSY, ULTERRA	1
AA	2994859	BAG ASY-TERROVA/V2,RUB.BUMPERS	1
Item	**Part #**	**Description**	**Quantity**
400	2204500	BASE PLATE-ULTERRA / TERROVA	1
402	✖	PCB ASSY, ULTERRA	1
404	2373440	SCREW-#4-24 X 1/4 PHCR SS TY B	6
406	2332103	SCREW-#6-20 X 3/8 THD*(SS)	2
408	2302100	SCREW-#6-20 X 1/2 THD CUTS	2
410	2322900	STRAIN RELIEF, FOOT PEDAL	1
412	2372100	SCREW-#8-18 X 5/8 THD* (SS	2
414	2320100	KNOB-SPEED, FOOT PEDAL	1
416	2322704	SPRING, LARGE SHORT SS	7
418	2203710	BUTTON,LFT STR w/TRIM UP ARROW	1
420	2203711	BUTTON,RGT STR w/TRIM UP ARROW	1
422	2203715	BUTTON, MOMENTARY/STOW-DEPLOY	1
424	2323715	BUTTON,MOM/CON,FT PEDAL	1
426	2323725	BUTTON,AP,FT PEDAL	1
428	2203720	BUTTON, SPOT LOCK,ULTERRA/TRRV	1
430	2203725	BUTTON, MODE, ULTERRA	1
432	2200200	COVER,HEEL TOE FOOT PEDAL	1
434	2205605	DECAL, 3 INDICATORS, ULTERRA	1
436	2324400	PEDAL,HEEL/TOE FOOT PEDAL	1
438	2326710	PLUG, FOOT PEDAL	1
440	2322714	SPRING (LEE #LC-029E-4-S) SS	1
442	2328600	FLEX FINGER, FOOT PEDAL	1
444	2321300	CLAMP-LEFT, FT PEDAL	1
446	2223430	SCREW-#8x3/4 PPH,TYPE 25,SS	2
448	2323710	BUTTON,MOM LEFT,FT PEDAL	1
450	2321300	CLAMP-LEFT, FT PEDAL	1
452	2223430	SCREW-#8x3/4 PPH,TYPE 25,SS	2
454	2322706	SPRING-BARREL SS	2
456	2323420	SCREW-#8-18 X 3/8" PFH SS TY B	2
458	2301310	SCREW-#8-18 X 1/2 (SS)*	11
460	2325110	PAD, FOOTPEDAL	5

✖ This part is included in an assembly and cannot be ordered individually.
▲ Not shown on Parts Diagram.
♦ May only be available with i-Pilot or i-Pilot Link.

ULTERRA MOUNT

Mount Parts Diagram

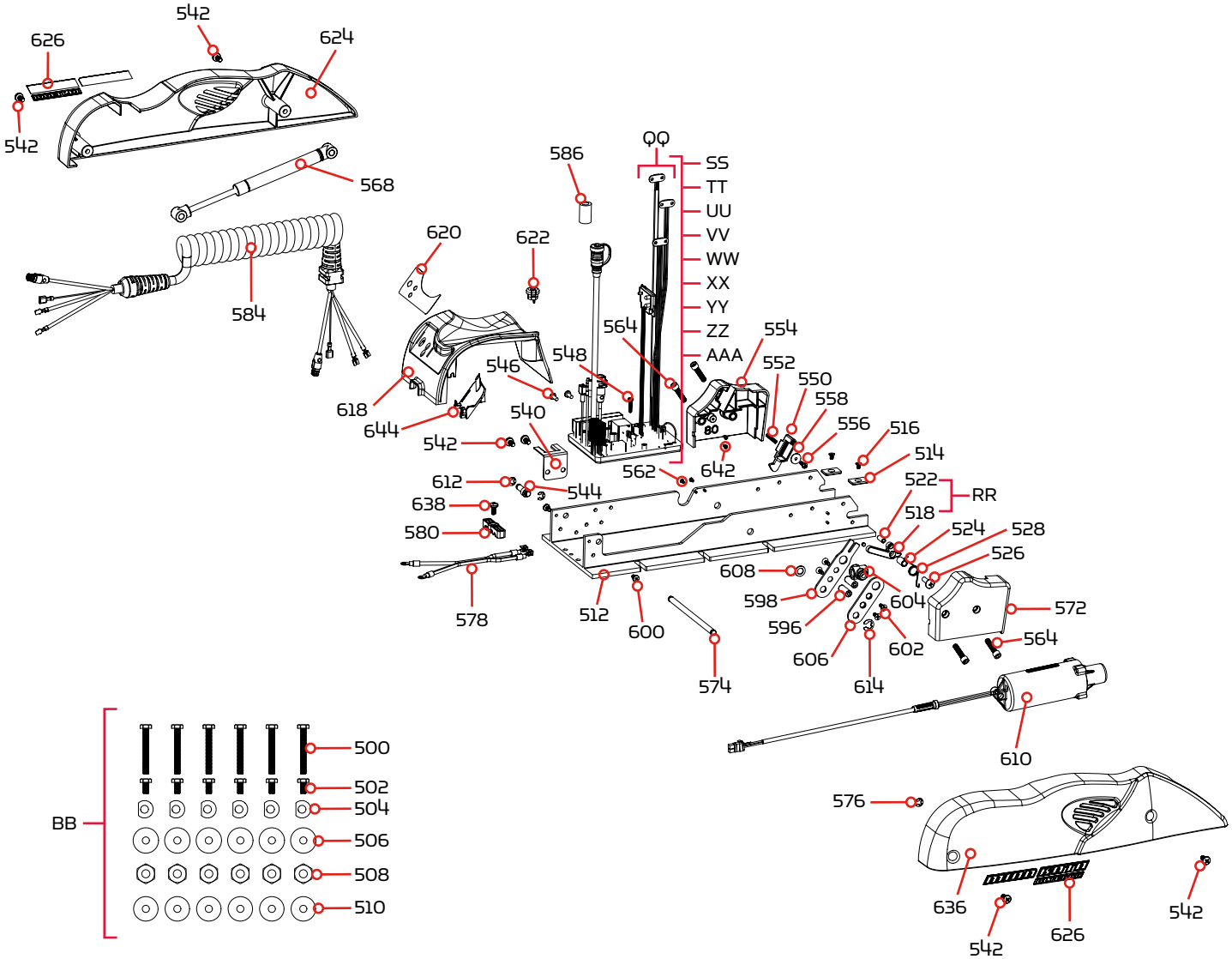

Mount Parts List

Assembly	Part #	Description	Quantity
BB	2994917	BAG ASSY, ULTERRA MTG HARDWARE	1
QQ	2880350	SENSOR WIRE W/BUTT CONNECTORS	1
RR	2777900	CAM W/MAGNET, SPRING PIN	1
SS	2774080	MAIN CTRL BD, US/AU/CA, 24V, 60" *80LB THRUST* *60*	1
TT	2774081	MAIN CTRL BD, US/AU/CA, 24V, 45" *80LB THRUST* *45*	1
UU	2774082	MAIN CTRL BD, US/AU/CA, 36V, 60" *112LB THRUST* *60*	1
VV	2774083	MAIN CTRL BD, US/AU/CA, 36V, 45" *112LB THRUST* *45*	1
WW	2774084	MAIN CTRL BD, EUR, 24V, 60" *80LB THRUST* *60* *M SKU EUROPE*	1
XX	2774085	MAIN CTRL BD, EUR, 24V, 45" *80LB THRUST* *45* *M SKU EUROPE*	1
YY	2774086	MAIN CTRL BD, EUR, 36V, 60" *112LB THRUST* *60* *M SKU EUROPE*	1
ZZ	2774087	MAIN CTRL BD, EUR, 36V, 45" *112LB THRUST* *45* *M SKU EUROPE*	1
AAA	2774091	MAIN CTRL BD, US/AU/CA, 36V, 72" *112LB THRUST* *72*	1
Item	**Part #**	**Description**	**Quantity**
500	2203430	SCREW-1/4-20 X 2.0 HHCS SS	6
502	2203431	SCREW-1/4-20 X 0.5 HHCS SS	6
504	2201725	WASHER-CLIPPED, 1/4", 1.00" OD	6
506	2261713	WASHER-1/4 FLAT 18-8 SS	6
508	2263103	NUT-1/4-20 NYLOCK SS	6
510	2301720	WASHER-MOUNTING - RUBBER	6
512	2201901	BASE, MACHINED, FW	1
514	2205105	PAD, STOP	2
516	2203420	SCREW-#10-24 X 5/16 PFH	2
518	2207900	CAM, PIN SENSOR w/MAGNET	1
522	2262632	PIN-SPRING 1/4" X 5/8" SS	1
524	2201702	SPACER, PIN SENSOR	1
526	9280710	HDW SCR 1/4 20X7/8 TRUSS PHIL	1
528	2042711	SPRING-TORSION, SS	1
540	2200821	CLIP-CORD, ZP	1
542	2323404	SCREW-1/4-20 X 1/2" T-L ZP	4
544	2202902	STANDOFF, OIL DAMPENER	2
546	2323406	SCREW-#10-24 X .50 CRPH SS	2
548	2373487	SCREW-#8-32 X 3/4" PPH MACH SS	1
550	2203700	PLUNGER, RAMP w/MAGNET	1
552	2202703	SPRING, PLUNGER-RAMP	1
554	2203916	RAMP-MOTOR, LEFT, 80#	1
	2203915	RAMP-MOTOR, LEFT, 112#	1
556	2301310	SCREW-#8-18 X 1/2 (SS)*	1

✖ This part is included in an assembly and cannot be ordered individually.
▲ Not shown on Parts Diagram.
♦ May only be available with i-Pilot or i-Pilot Link.

Item	Part #	Description	Quantity
558	2201722	WASHER-#6, .625 OD, ZP STEEL	1
560	2373440	SCREW-#4-24 X 1/4 PHCR SS TY B	2
562	2053411	SCREW-#4-40 X 1/4 PPH ZP	4
564	2263453	SCREW-1/4-20 X 1" SHCS S/S	4
▲	2200825	CLIP, SENSOR CABLE	2
568	2208800	DAMPER, HYBRID, 80#	1
	2208802	DAMPER, HYBRID, 112#	1
572	2203911	RAMP-MOTOR, RIGHT, 80#	1
	2203910	RAMP-MOTOR, RIGHT, 112#	1
574	2202606	PIN, ACTUATOR, ZP	1
576	2263006	E-RING,5/16,S/S GAS ASSIST	1
578	2090651	LEADWIRE,10 GA,PD/GENESIS	1
580	2321310	STRAIN RELIEF	1
582	2263453	SCREW-1/4-20 X 1" SHCS S/S	1
584	2991272	COIL CORD ASY 54/60"U.SONAR	1
	2991276	COIL CORD ASY 72" U.SONAR	1
586	2307313	BEAD-FERRITE	1
596	2202901	STANDOFF, LIFT ARM	2
598	2204201	ARM-LIFT, INNER, ZP	1
600	2383447	SCREW-#10-32 X 3/8" PPH SS	2
602	2203410	SCREW-#10-32 X .5"	4
604	2203100	NUT, TILT MOTOR	1
606	2204206	ARM-LIFT, OUTER, ZP	1
608	2321702	WASHER-FLAT .375 NYLON	1
610	2997813	ASSEMBLY, TILT MOTOR	1
612	2263006	E-RING,5/16,S/S GAS ASSIST	1
614	2263011	E-RING 3/8 DIA. SHAFT*	1
618	2206510	HOUSING-CONTROL, BLACK	1
620	2205600	DECAL, B.METER/CON/PWR FW, BLK	1
622	2202910	STRAIN RLF,HEYC SR 6N3-4	1
624	2203905	SIDEPLATE, LEFT	1
626	2205510	DECAL, SIDEPLATE, FW	2
636	2203900	SIDEPLATE, RIGHT	1
638	2323404	SCREW-1/4-20 X 1/2" T-L ZP	1
▲	2256300	TIE WRAP-5.5" BLACK	2
▲	2052510	CABLE CLAMP, 3/16", NYLON	2
642	2373440	SCREW-#4-24 X 1/4 PHCR SS TY B	6
644	2200823	CLIP, POWER BUTTON	1

✖ This part is included in an assembly and cannot be ordered individually.
▲ Not shown on Parts Diagram.
♦ May only be available with i-Pilot or i-Pilot Link.

NOTES

RECOMMENDED ACCESSORIES

ON-BOARD & PORTABLE BATTERY CHARGERS

Stop buying new batteries and start taking care of the ones you've got. Many chargers can actually damage your battery over time – creating shorter run times and shorter overall life. Digitally controlled Minn Kota chargers are designed to provide the fastest charge that protect and extend battery life.

MK212PC

MK210D

MK110P

TALON SHALLOW WATER ANCHOR

Talon deploys faster, holds stronger and runs quieter than any other shallow water anchor. Available in depths up to 12' and bold color options including camo, it boasts an arsenal of features and innovations that no other anchor can touch:

- Vertical, Multi-Stage Deployment
- User-Selectable Anchoring Modes
- 2x Anchoring Force
- Fast Deploy
- Auto Up/Down
- Triple Debris Shields
- Built-In Wave Absorption
- Noise Dissipation
- Versatile Adjustments

MINN KOTA ACCESSORIES

We offer a wide variety of trolling motor accessories, including:

- 60-Amp Circuit Breaker
- Mounting Brackets
- Stabilizer Kits
- Extension Handles
- Battery Connectors
- Battery Boxes
- Quick Connect Plugs

For a complete listing of Minn Kota accessories, visit minnkotamotors.com

Follow us:

minnkotamotors.com

Minn Kota Consumer & Technical Service
Johnson Outdoors Marine Electronics, Inc.
PO Box 8129
Mankato, MN 56001

121 Power Drive
Mankato, MN 56001
Phone (800) 227-6433
Fax (800) 527-4464

Part #2207111 ECN 38208 Rev G 08/17

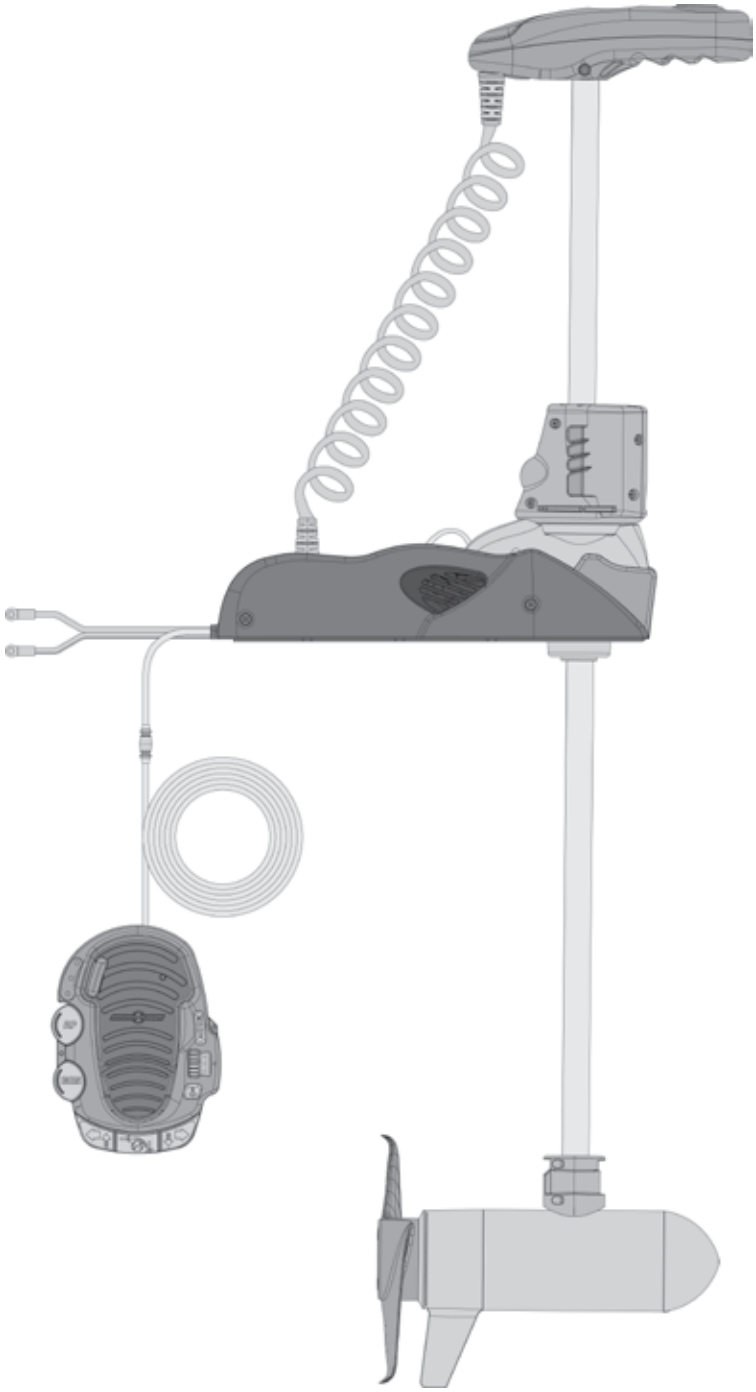

ULTERRA™

BOW-MOUNT TROLLING MOTOR

INSTALLATION INSTRUCTIONS

INTRODUCTION

THANK YOU

Thank you for choosing Minn Kota. We believe that you should spend more time fishing and less time positioning your boat. That's why we build the smartest, toughest, most intuitive trolling motors on the water. Every aspect of a Minn Kota trolling motor is thought out and rethought until it's good enough to bear our name. Countless hours of research and testing provide you the Minn Kota advantage that can truly take you "Anywhere. Anytime." We don't believe in shortcuts. We are Minn Kota. And we are never done helping you catch more fish.

REGISTRATION

Remember to keep your receipt and immediately register your trolling motor. A registration card is included with your motor or you can complete registration on our website at minnkotamotors.com.

SERIAL NUMBER

Your Minn Kota 11-character serial number is very important. It helps to determine the specific model and year of manufacture. When contacting Consumer Service or registering your product, you will need to know your product's serial number. We recommend that you write the serial number down so that you have it available for future reference.

NOTE: The serial number on your Ulterra is located inside the mount near the motor rests.

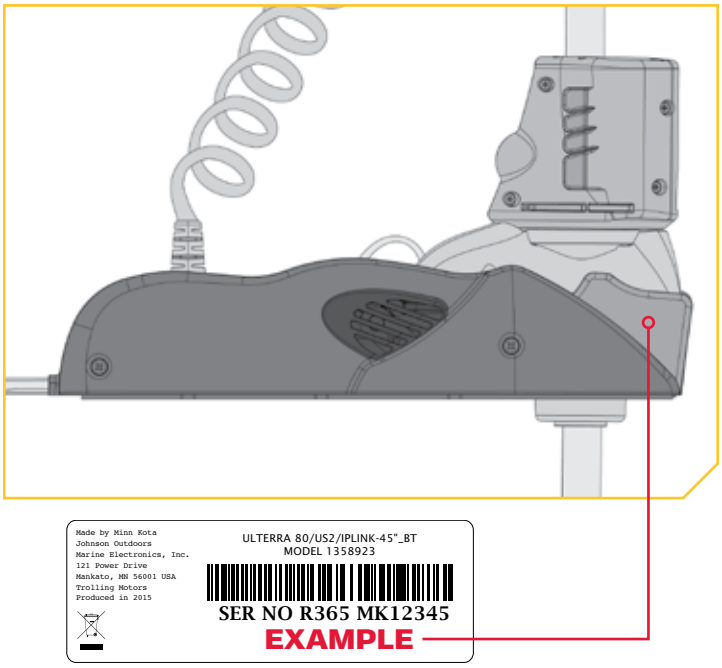

MOTOR INFORMATION (FOR CUSTOMER REFERENCE ONLY)

Model: _____

Serial Number: _____

Purchase Date: _____

Store Where Purchased: _____

NOTE: Do not return your Minn Kota motor to your retailer. Your retailer is not authorized to repair or replace this unit. You may obtain service by: calling Minn Kota at (800) 227-6433; returning your motor to the Minn Kota Factory Service Center; sending or taking your motor to any Minn Kota authorized service center. A list of authorized service centers is available on our website, at minnkotamotors.com. Please include proof of purchase, serial number and purchase date for warranty service with any of the above options.

SAFETY CONSIDERATIONS

Please thoroughly read the user manual. Follow all instructions and heed all safety and cautionary notices. Use of this motor is only permitted for persons that have read and understood these user instructions. Minors may use this motor only under adult supervision.

⚠ WARNING

You are responsible for the safe and prudent operation of your vessel. We have designed your Minn Kota product to be an accurate and reliable tool that will enhance boat operation and improve your ability to catch fish. This product does not relieve you from the responsibility for safe operation of your boat. You must avoid hazards to navigation and always maintain a permanent watch so you can respond to situations as they develop. You must always be prepared to regain manual control of your boat. Learn to operate your Minn Kota product in an area free from hazards and obstacles.

⚠ WARNING

Never run the motor out of the water, as this may result in injuries from the rotating propeller. The motor should be disconnected from the power source when it is not in use or is off the water. When connecting the power-supply cables of the motor to the battery, ensure that they are not kinked or subject to chafe and route them in such a way that persons cannot trip over them. Before using the motor make sure that the insulation of the power cables is not damaged. Disregarding these safety precautions may result in electric shorts of battery(s) and/or motor. Always disconnect motor from battery(s) before cleaning or checking the propeller. Avoid submerging the complete motor as water may enter the lower unit through control head and shaft. If the motor is used while water is present in the lower unit considerable damage to the motor can occur. This damage will not be covered by warranty.

⚠ WARNING

Take care that neither you nor other persons approach the turning propeller too closely, neither with body parts nor with objects. The motor is powerful and may endanger or injure you or others. While the motor is running watch out for persons swimming and for floating objects. Persons whose ability to run the motor or whose reactions are impaired by alcohol, drugs, medication, or other substances are not permitted to use this motor. This motor is not suitable for use in strong currents. The constant noise pressure level of the motor during use is less than 70dB(A). The overall vibration level does not exceed 2,5 m/sec2.

⚠ WARNING

When stowing or deploying the motor, keep fingers clear of all hinge and pivot points and all moving parts. In the event of unexpected operation, remove power leads from the battery.

⚠ WARNING

It is recommended to only use Johnson Outdoors approved accessories with your Minn Kota motor. Using non-approved accessories including to mount or control your motor may cause damage, unexpected motor operation and injury. Be sure to use the product and approved accessories, including remotes, safely and in the manner directed to avoid accidental or unexpected motor operation. Keep all factory installed parts in place including motor and accessory covers, enclosures and guards.

KNOW YOUR BOAT

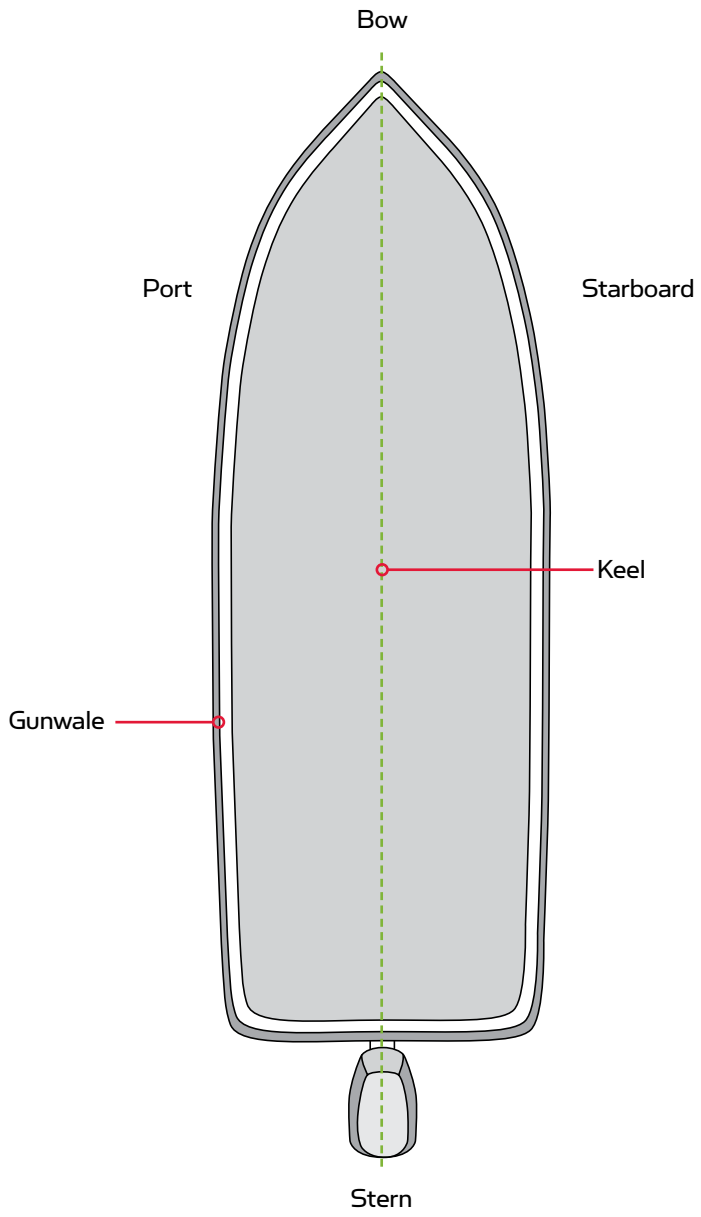

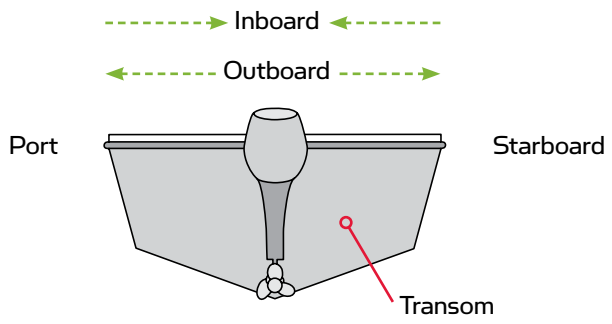

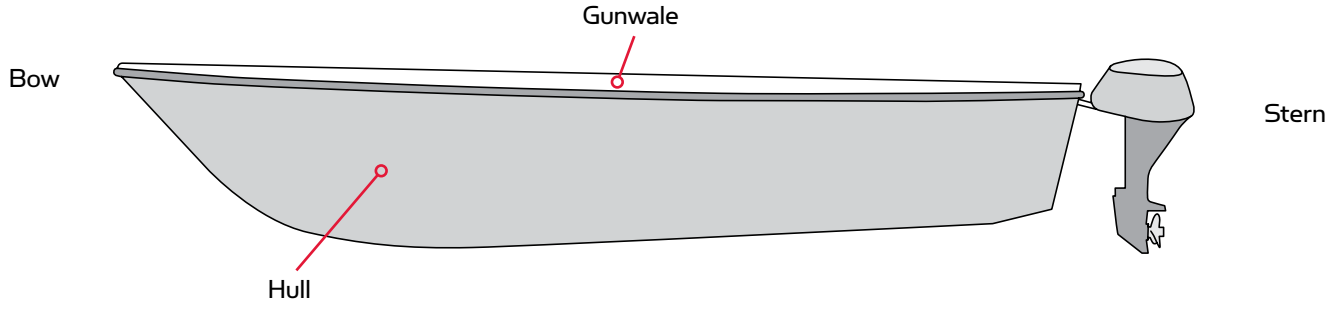

INSTALLATION

INSTALLING THE ULTERRA

Your new Ulterra comes with everything you'll need to directly install it to the boat. This motor can be directly mounted to the boat or it may be coupled with a Minn Kota quick release bracket for ease of mounting and removal. For installation with a quick release bracket, refer to the installation instructions provided with the bracket. For compatible quick release mounting bracket, please visit minnkotamotors.com. To install the motor directly to the boat, please follow the instructions provided in this manual. Please review the parts list, mounting considerations and tools needed for installation prior to getting started. For additional product support and to locate your nearest dealer, please visit minnkotamotors.com.

INSTALLATION PARTS LIST

Item / Assembly	Part #	Description	Qty.
1	✖	MOTOR ASSEMBLY	1
AA	2994859	BAG ASY-TERROVA/V2,RUB.BUMPERS	1
2	2325110	PAD, FOOTPEDAL	5
BB	2994917	BAG ASSY, ULTERRA MTG HARDWARE	1
3	2203430	SCREW-1/4-20 X 2.0 HHCS SS	6
4	2203431	SCREW-1/4-20 X 0.5 HHCS SS	6
5	2201725	WASHER-CLIPPED, 1/4", 1.00" OD	6
6	2261713	WASHER-1/4 FLAT 18-8 SS	6
7	2263103	NUT-1/4-20 NYLOCK SS	6
8	2301720	WASHER-MOUNTING - RUBBER	6
9	2203800	STRAP, HOLD DOWN	1
10	2994075 ♦	REMOTE ASSEMBLY, IPILOT	1
11	2994076 ♦	REMOTE ASSEMBLY LINK TOUCHSCREEN	1
▲	2397101 ♦	MANUAL, QUICK REF., iPILOT 1.6	1
▲	2397103 ♦	MANUAL-QUICK REF., iPILOT 3.0	1
12	2390800 ♦	LANYARD, REMOTE W/ CARABINER	1
13	2373241 ♦	CABLE, USB REMOTE CHARGER LINK	1
14	2375901 ♦	ADAPTER, USB DC POWER LINK	1
15	2996400 ♦	HEADING SENSOR ASSEMBLY	1
16	490389-1 ♦	CABLE, ETH (M12-M-M12-F, 30'	1
17	2211415	CABLE-EXTENSION, PD/AP 110"	1
CC	1378132	80# THRUST PROP KIT	1
DD	1378160	112# THRUST PROP KIT	1
18	2262658	PIN-DRIVE 1" X 3/16" S/S	1
19	2091701	WASHER-PROP (LARGE) MAX101	1
20	2093101	NUT-PROP,NYLOC,LG,MX101 3/8 SS	1
21	2331160	PROP-WW2 (4") w/ADP.RING	1
	2341160	PROP-WW2 (4.5) w/ADP.RING	1
▲	2207113	MANUAL, INSTALL GUIDE, ULTERRA	1
22	2994740	FOOT PEDAL ASSY, ULTERRA	1

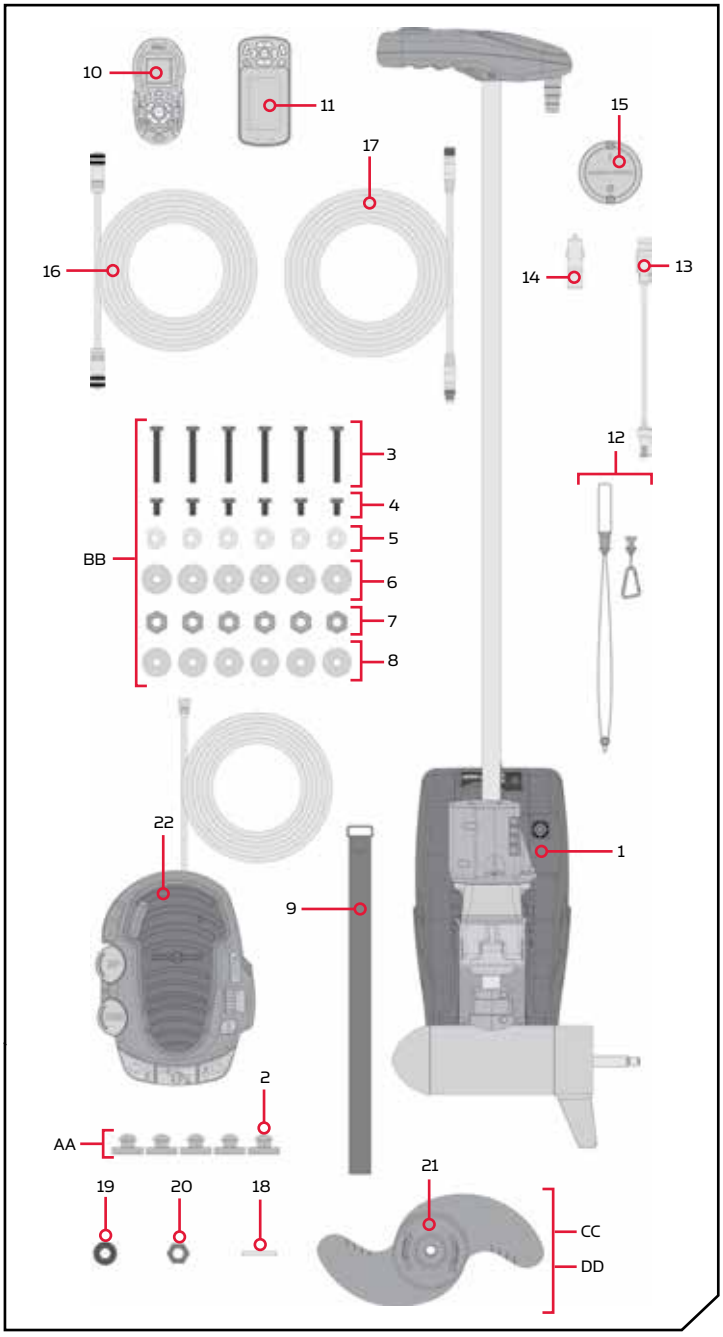

▲ Not shown on Parts Diagram.
✖ This part is included in an assembly and cannot be ordered individually.
♦ Only available with models factory installed with i-Pilot or i-Pilot Link.

MOUNTING CONSIDERATIONS

It is recommended that the motor be mounted as close to the keel or centerline of the boat as possible. Make sure the area under the mounting location is clear to drill holes and install nuts and washers. Make sure the motor rest is positioned far enough beyond the edge of the boat. The motor must not encounter any obstructions as it is lowered into the water or raised into the boat when stowed and deployed. Consider a quick release or adapter bracket with the installation of your motor. To view a list of accessories, please visit minnkotamotors.com.

View accessories available for your trolling motor at minnkotamotors.com.

TOOLS AND RESOURCES REQUIRED

- #2 Phillips Screwdriver
- #3 Phillips Screwdriver
- Drill
- 9/32" Drill Bit
- A person to help with installation

INSTALLATION

Installing the Ulterra

1

a. Place the mount on an elevated, level surface such as a workbench or the tailgate of a pickup. The motor, as removed from the box, should be in the stowed position.

b. Remove the four sideplate screws using a #3 or #2 Phillips screwdriver. Two of these screws will be located on each side of the mount.

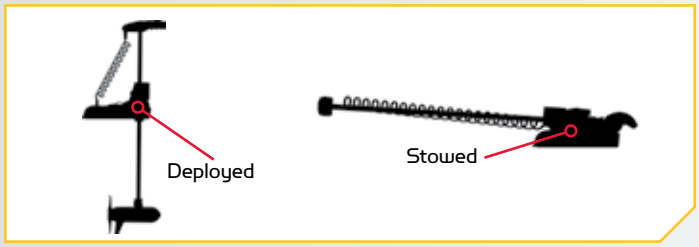

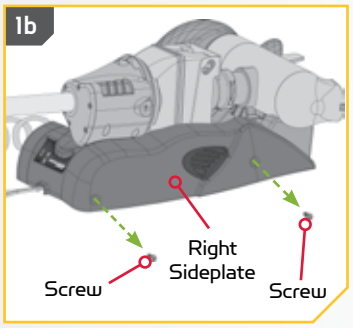

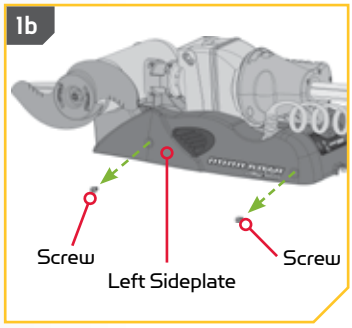

NOTE: This motor weighs approximately 70 lbs. We recommend having a second person help with the installation.

2

c. Remove the Right Sideplate to access the Mounting Slots.

d. Remove the Left Sideplate to access the Mounting Holes.

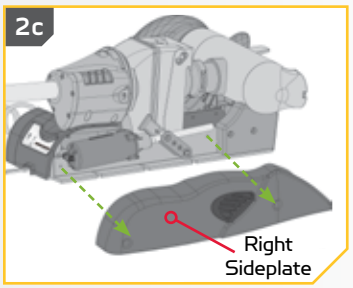

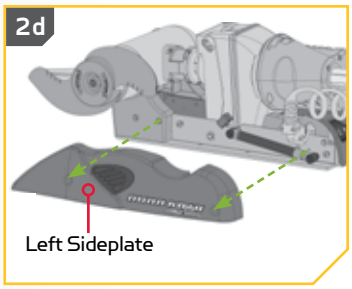

3

e. Under the Left Sideplate, the Extension Damper obstructs access to the left front Mounting Hole.

f. Using a small Screw Driver, remove the two 5/16" E-clips holding the Extension Damper in place. Once the E-clips are removed, slide the Extension Damper off the Mount to expose the left rear Mounting Hole. Set the two E-clips and Extension Damper in a safe place so they are not misplaced before they are reassembled later in the installation.

⚠ WARNING

Do not deploy the motor until it is fully mounted to the boat. Illustrations are for reference only. Deploying your motor before it is mounted to the boat may cause injury.

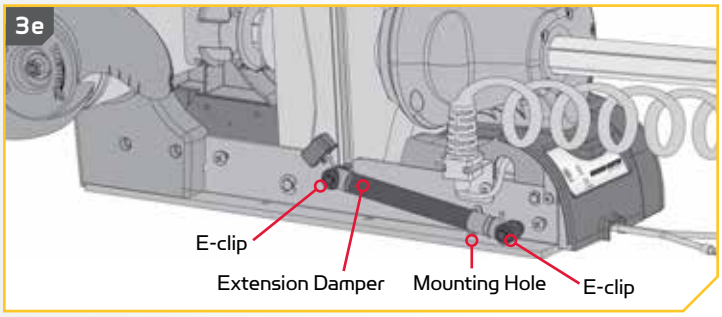

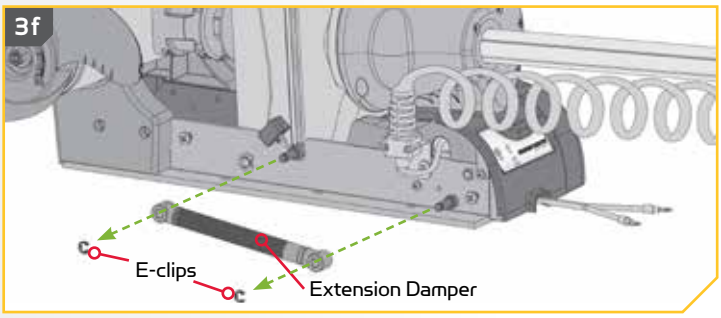

4

g. Make sure the Power Cables from the battery are disconnected, or that the breaker, if equipped, is “off”.

⚠ WARNING

Make sure the motor is mounted on a level surface and is not connected to a power source.

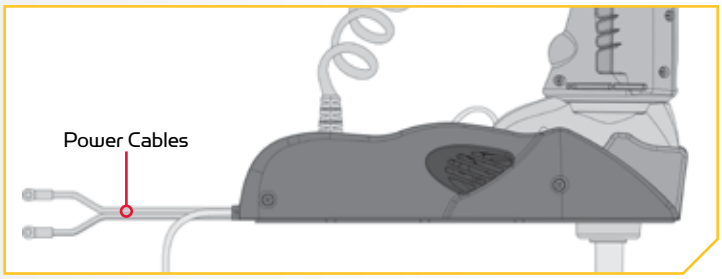

5

h. Place the motor on the bow of the boat. Place the motor as close to the centerline or keel of the boat as possible. The motor can be installed on either the Port or Starboard side of the boat based on personal preference. Reviewing the mounting considerations at the beginning of the installation section.

NOTE: The Emergency Strap (Item #9) is used for Manually Stowing the Ulterra. The Emergency Strap is not secured during installation. Store it on your boat in the event that you would need to manually stow the motor. To learn how, please refer to the "Manually Stowing the Ulterra" section of the Owner's Manual.

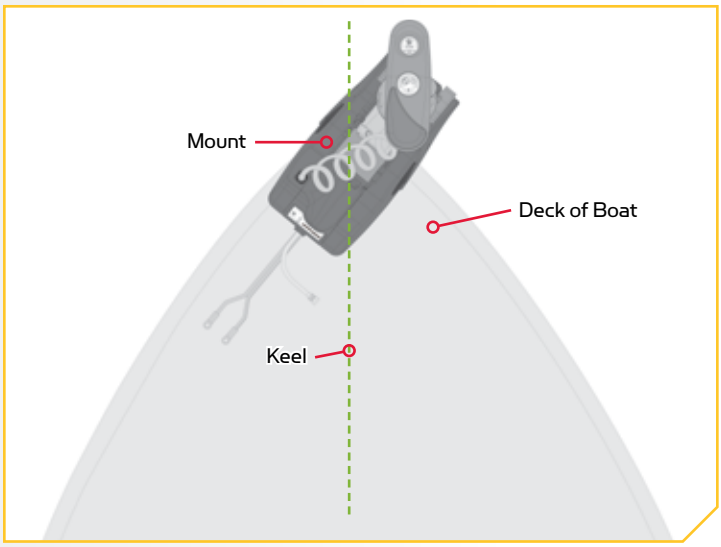

6

ITEM(S) NEEDED

#8 x 6

⚠ WARNING

Do not deploy the motor until it is fully mounted to the boat. Illustrations are for reference only. Deploying your motor before it is mounted to the boat may cause injury.

i. Make sure the slot on the underside of the Base Extrusion is aligned with the outermost part of the gunwale of the boat. This will ensure that the Shaft has a minimum clearance of 1-1/2" when it is deployed. The lower unit when stowed and deployed must not encounter any obstructions.

j. Check to be sure that the Mount is level. Use the Rubber Washers (Item #8) provided to create a level surface if necessary.

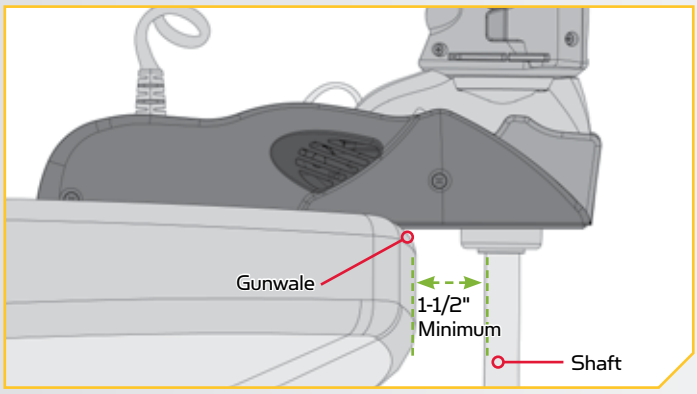

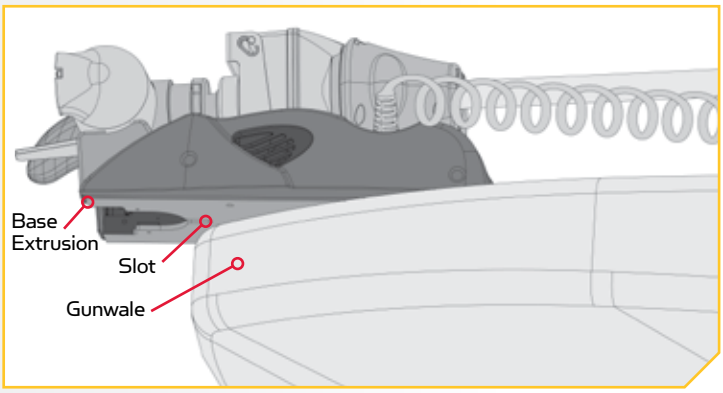

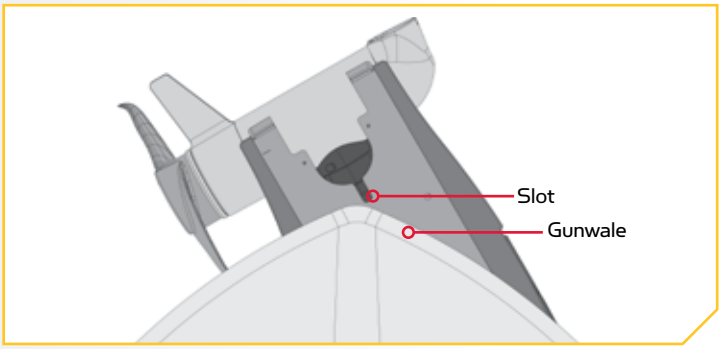

7

k. It is recommended to mark at least 4 of the 6 holes in the Base Extrusion to have a minimum of two bolts on each side that are located the farthest apart. Ideal installation would allow for 6 bolts to be used, with a minimum of 4.

l. Make sure the area under the mounting location is clear to drill holes and install nuts and washers. Drill through the marked holes using a 9/32" drill bit.

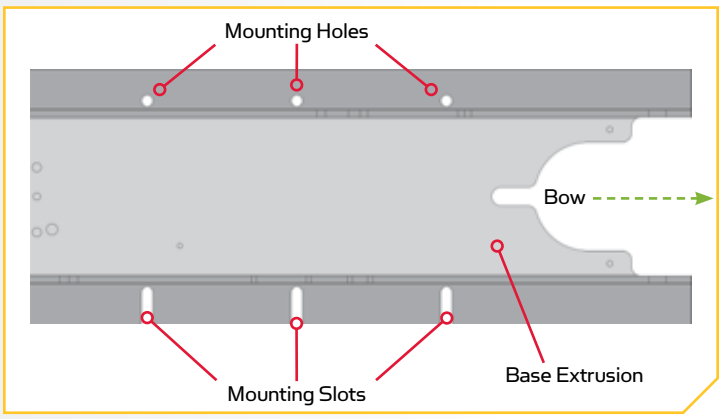

8

m. Mount the motor to the boat using the provided hardware. Place the installation hardware for the side of the mount where the Power Tilt is located first. This is the opposite side of the mount from where the Extension Damper was removed. The base of the Mount where the Power Tilt is located has Mounting Slots and the side where the Extension Damper is located has Mounting Holes.

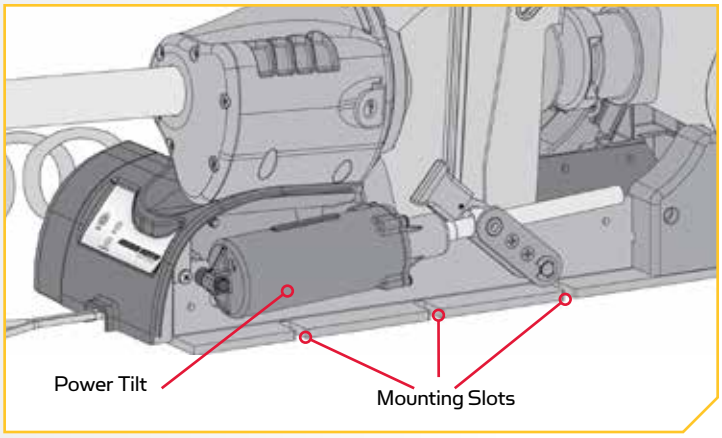

9

ITEM(S) NEEDED

#3 x 3 | #6 x 3 | #5 x 3 | #7 x 3 | #4 x 3

NOTE: To prevent seizing of the stainless steel hardware, do not use high speed installation tools. Wetting the screws or applying an anti-seize may help prevent seizing.

n. **If installing with a Quick Release Bracket,** install the motor with the Hex Head Bolts (Item #4) and Clipped Washers (Item #5). Orientate the Clipped Washers so that the flat side of the washer is towards the Base Extrusion. The Bolt should pass through the Clipped Washer and into a Quick Release Bracket. Leave at least 1/4" space between the Hex Head Bolt and Clipped Washer in order to slide the Base Extrusion under the Clipped Washer and into place.

NOTE: The Long Bolts, Flat Washers and Nylock Nut are not used when installing the Ulterra with a Quick Release Bracket.

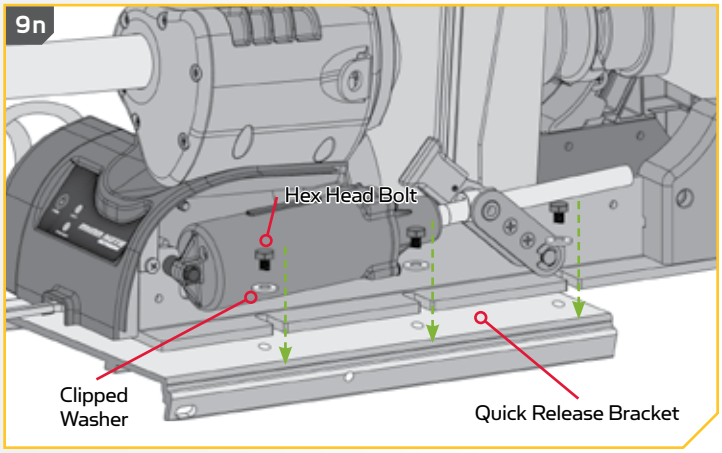

⚠ CAUTION

Use extra care to avoid pinching and damaging the sensor wires that run along side of the Base Extrusion when installing and tightening the motor mounting bolts.

10

o. If installing directly to the boat deck, install the motor with the Long Bolts (Item #3), Clipped Washer (Item #5), Flat Washer (Item #6) and Nylock Nut (Item #7). Orientate the Clipped Washers so that the flat side of the washer is towards the Base Extrusion. The Bolt should pass through the Clipped Washer, the Rubber Washer and then through the Boat Deck. The Bolt should be secured by first adding the Flat Washer (Item #6) to the Bolt and securing with a Nylock Nut (Item #7). Leave at least 1/4" space between the Hex Head Bolt and Clipped Washer and the deck of the boat. This will leave enough space to slide the Base Extrusion between the Clipped Washer and Rubber Washer and into place.

NOTE: The Short Bolts are not used when installing the Ulterra directly to the boat.

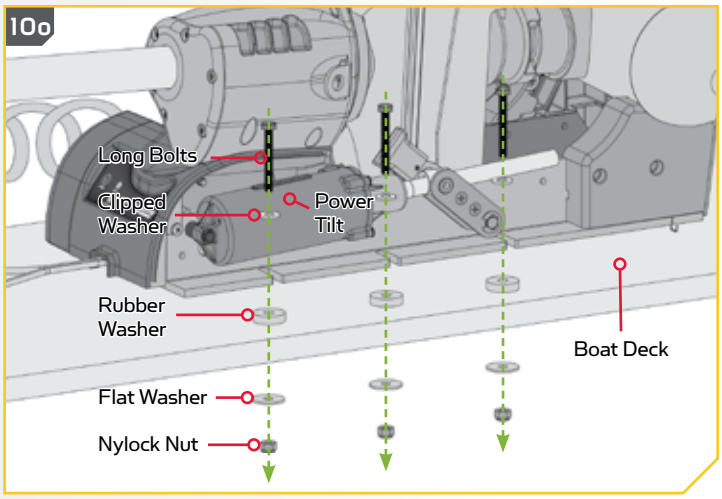

11

p. Slide the Base Extrusion into place under the Bolts that were just installed.

q. If installing with a Quick Release Bracket, the Base Extrusion should slide between the Quick Release Bracket and the Clipped Washers. Hold the Clipped Washers up on the Hex Head Bolt, so the Clipped Washer will sit on top of the Base Extrusion.

r. If installing directly to the boat deck, the Base Extrusion should slide between the Clipped Washer and the Rubber Washer. Hold the Clipped Washers up on the Long Bolt, so the Clipped Washer will sit on top of the Base Extrusion.

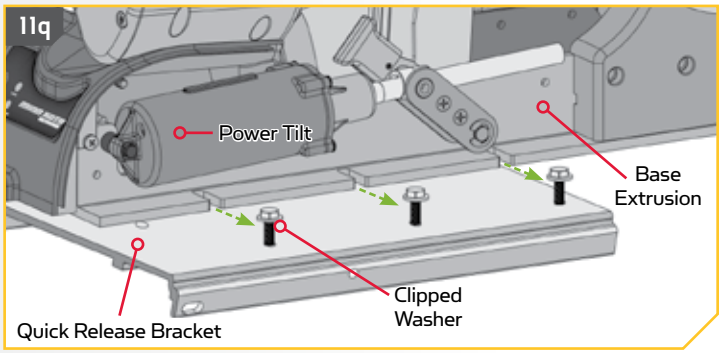

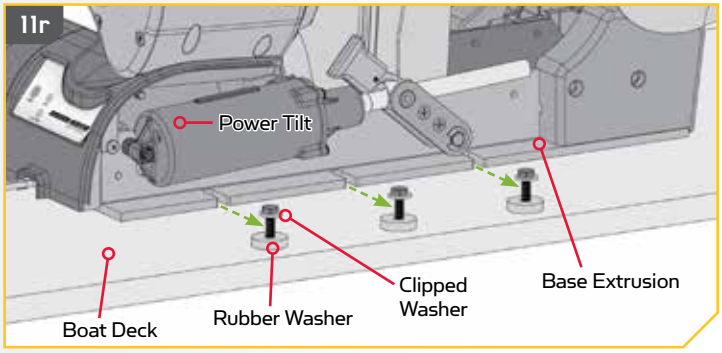

12

ITEM(S) NEEDED

#3 x 3 | #6 x 3 | #5 x 3 | #7 x 3 | #4 x 3

NOTE: To prevent seizing of the stainless steel hardware, do not use high speed installation tools. Wetting the screws or applying an anti-seize may help prevent seizing.

s. Place the hardware on the Damper side of the mount into the Mounting Holes to secure the Base Extrusion.

t. **If installing with a Quick Release Bracket,** install the motor with the Hex Head Bolts (Item #4) and Clipped Washers (Item #5). Orientate the Clipped Washers so that the flat side of the washer is towards the Base Extrusion. The Bolt should pass through the Clipped Washer, Base Extrusion and into a Quick Release Bracket.

NOTE: The Long Bolts, Flat Washers and Nylock Nut are not used when installing the Ulterra with a Quick Release Bracket.

u. **If installing directly to the boat deck,** install the motor with the Long Bolts (Item #3), Clipped Washer (Item #5), Flat Washer (Item #6) and Nylock Nut (Item #7). Orientate the Clipped Washers so that the flat side of the washer is towards the Base Extrusion. The Bolt should pass through the Clipped Washer, the Base Extrusion, the Rubber Washer and then through the Boat Deck. The Bolt should be secured by first adding the Flat Washer (Item #6) and then securing with a Nylock Nut (Item #7).

NOTE: The Short Bolts are not used when installing the Ulterra directly to the boat.

⚠ CAUTION

Use extra care to avoid pinching and damaging the sensor wires that run along side of the Base Extrusion when installing and tightening the motor mounting bolts.

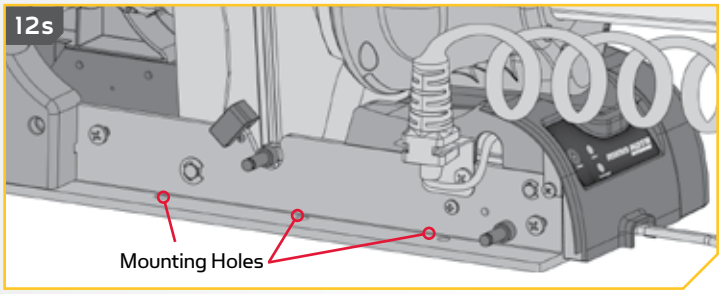

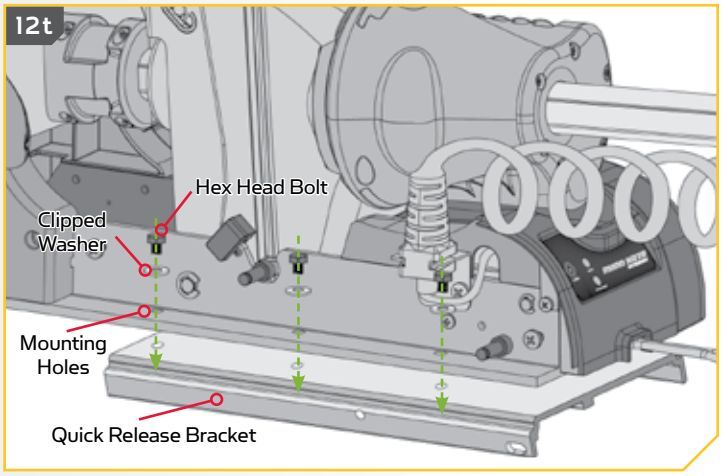

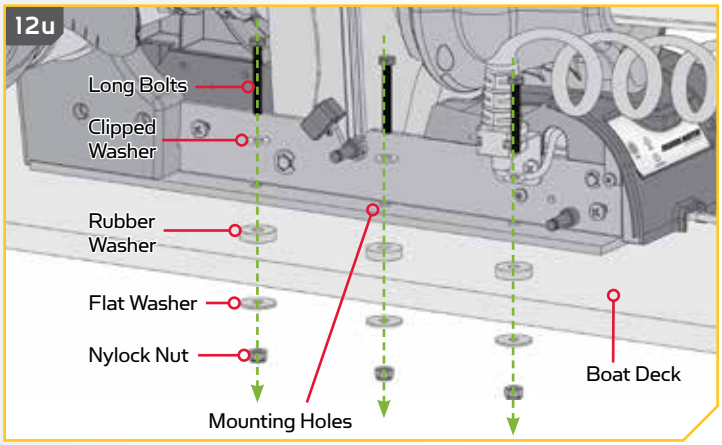

13

v. At this point in the installation process the Mount should be secured to the deck of the boat, and the Motor can now be reassembled. The Extension Damper can be slid back in place on the Motor. This should be done so the shaft on the Damper is pointing inboard. Reinstall the two 5/16" E-clips.

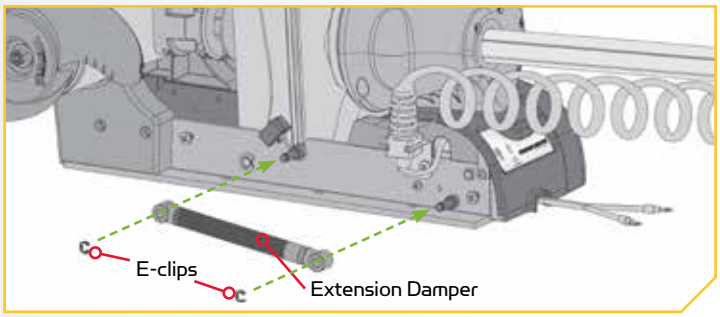

14

w. Replace the Right Sideplate.

x. Replace the Left Sideplate.

y. Replace the four sideplate Screws using a #2 or #3 Phillips Screw Driver.

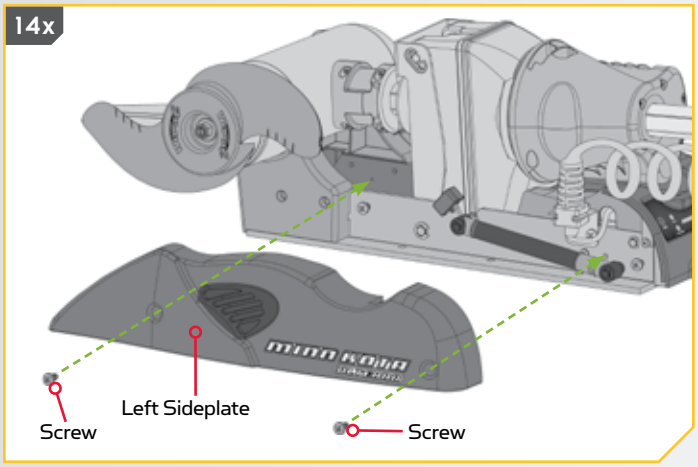

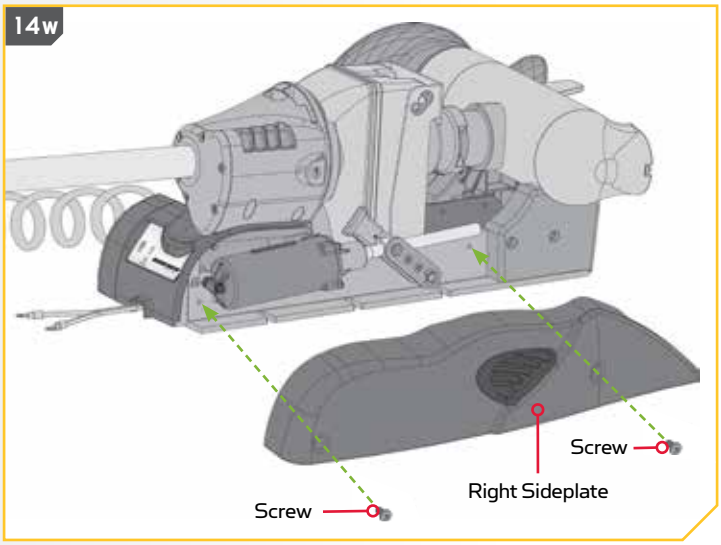

15

ITEM(S) NEEDED

#18 x 4

#EE x 1

z. Take the Foot Pedal (Item #EE) and turn it over. Put a Foot Pedal Pad (Item #18) in each of the pad locations.

NOTE: The pads are recommended when using the Foot Pedal on non-carpeted surfaces.

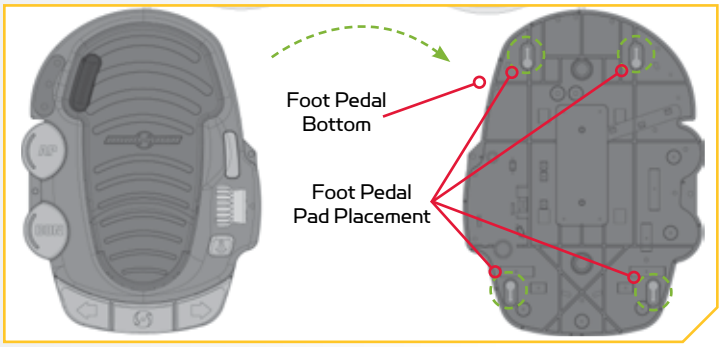

Routing Universal Sonar & i-Pilot Link Cables

Your trolling motor may be pre-installed with a Universal Sonar transducer system. Universal Sonar is a 2D sonar transducer with a temperature sensor that is integrated into the lower unit of the trolling motor. It has an operating frequency of 83/200 kHz. Connecting this transducer to a compatible fish finder* gives you a 2D sonar view of what is happening directly below your trolling motor. The integrated design protects the transducer from underwater hazards, and prevents tangles and damage to the transducer cables.

In certain situations, air bubbles may adhere to the surface of the Universal Sonar transducer, and affect the performance. If this happens simply wipe the surface of the transducer with your finger.

All Universal Sonar motors are equipped with an internal bonding wire, incorrect rigging will cause sonar interference and can damage your trolling motor, electronics and other boat accessories. Please refer to the Battery & Wiring Installation and Motor Wiring Diagram sections of this manual for correct rigging instructions.

NOTE: Universal Sonar only provides 2D sonar that operates at 83/200 kHz. It does not support imaging screens that require higher frequencies such as 455 kHz or 800 kHz (Down Imaging, Side Imaging, etc.). Down Imaging (DI) specific units are not compatible with Universal Sonar. See compatibility chart for a list of compatible fish finders at minnkotamotors.com. *Requires an adapter that is sold separately. For a current list of compatible fish finders and the correct adapter cable, please visit minnkotamotors.com.

Your trolling motor may be pre-installed with a Universal Sonar transducer system. For compatibility and more information on Universal Sonar, please visit minnkotamotors.com. Your trolling motor may also be pre-installed with either i-Pilot or i-Pilot Link. To learn more about the GPS capabilities available with your i-Pilot or i-Pilot Link navigation system, please refer to the corresponding Owner's Manual by visiting minnkotamotors.com.

Both the Universal Sonar and i-Pilot Link features require cables to be connected to an output device. These connections are present on the trolling motor below the Control Head. The i-Pilot system does not need an external wired connection. If only one connection is present, it is because your motor is equipped with the i-Pilot system. If only a single connection is present, it is to connect the Universal Sonar. If two cables are present, one is to connect the Universal Sonar, and the other is to connect the i-Pilot Link connection. Please follow the Minn Kota recommendations on routing the cables to optimize mobility and maximize functionality. The routing will be the same regardless of the number of cables present. Use the following instructions to properly route cables.

The Universal Sonar Cables are shielded to minimize interference. To protect this shielding the cables should not be pulled tight against sharp angles or hard objects. If using cable ties, do not over-tighten. Any excess cable should be bundled in a loose loop of no less than 4" in diameter.

To minimize trolling motor interference, ensure that the fish finder and trolling motor are powered by separate batteries. Please refer to the Battery & Wiring Installation and Motor Wiring Diagram sections of this manual for correct rigging instructions.

To better identify cables present that exit the Control Head, refer to the diagrams below that detail what the Universal Sonar and i-Pilot Link cable connectors look like.

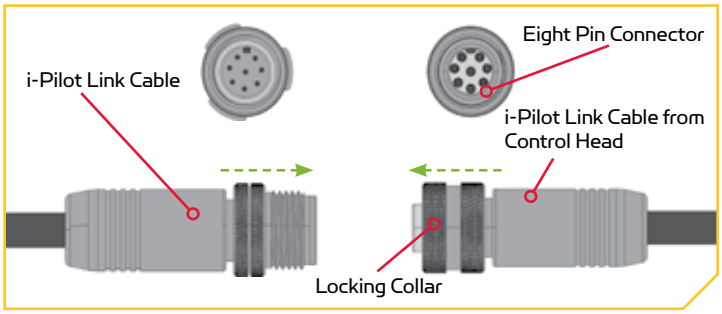

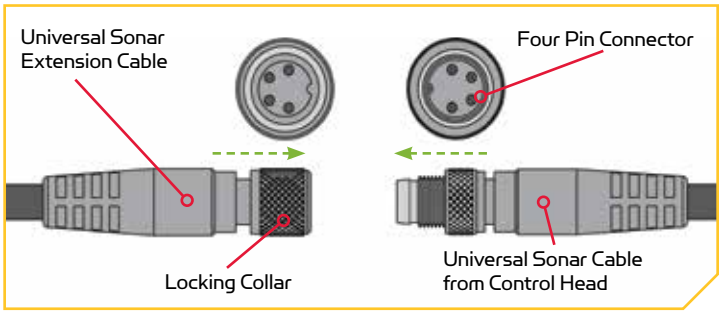

1

a. Place the motor in the deployed position.

b. Locate the Universal Sonar and/or the i-Pilot Link cable(s), at the base of the Control Head.

⚠ CAUTION

Not following the recommended wire routing for the Universal Sonar and/or i-Pilot Link cable(s), if equipped, may cause damage to the product and void your product warranty. Route cables away from pinch points or other areas that may cause them to bend in sharp angles. Routing the cables in any way other than directed may cause damage to the cables by being pinched or severed.

c. The Universal Sonar Cable and/or i-Pilot Link cable should be fed all the way through the Coil Cord. It/they should exit the Coil Cord at the bottom of the Coil Cod, where it connects to the Mount.

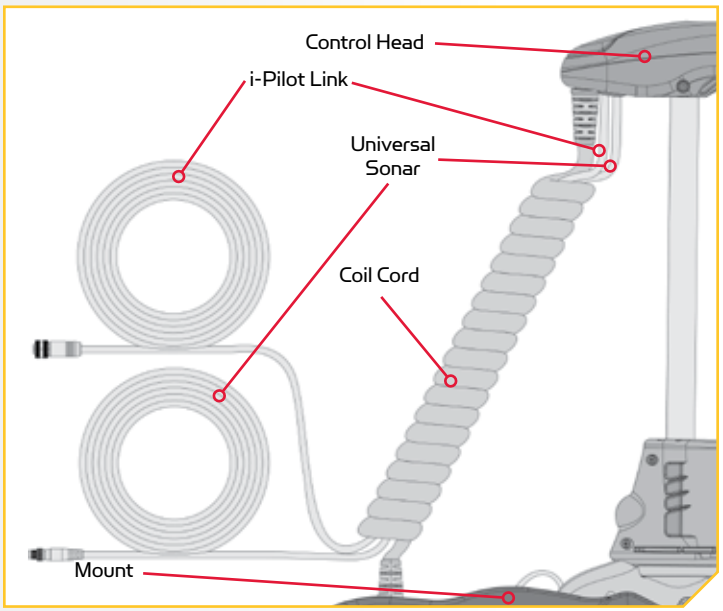

NOTE: After the Universal Sonar Cable and/or i-Pilot Link Cable exits the Coil Cord, it should be routed through an established routing system on the boat, in an area with minimal interference. Inspect the selected route carefully to ensure that there are no sharp edges, obstacles, or obstructions that may damage the cables.

Connecting a Universal Sonar Extension Cable

The Universal Sonar Cable may not be long enough to reach the fish finder. If the cable length does not reach the desired fish finder installation location, a 14.5' extension cable is available. Minn Kota recommends using the MKR-US2-11.

1

a. Place the motor in the deployed position.

b. Locate the Universal Sonar, if equipped, at the base of the Mount.

c. Locate the Universal Sonar four pin connector at the end of Universal Sonar Extension Cable. The connector is black with a stainless steel threaded locking collar.

NOTE: Your fish finder should be turned off until this procedure is complete.

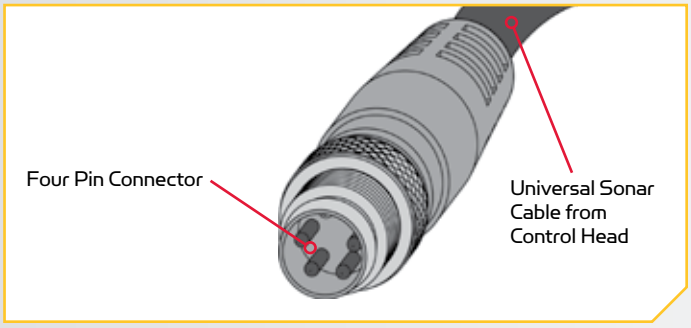

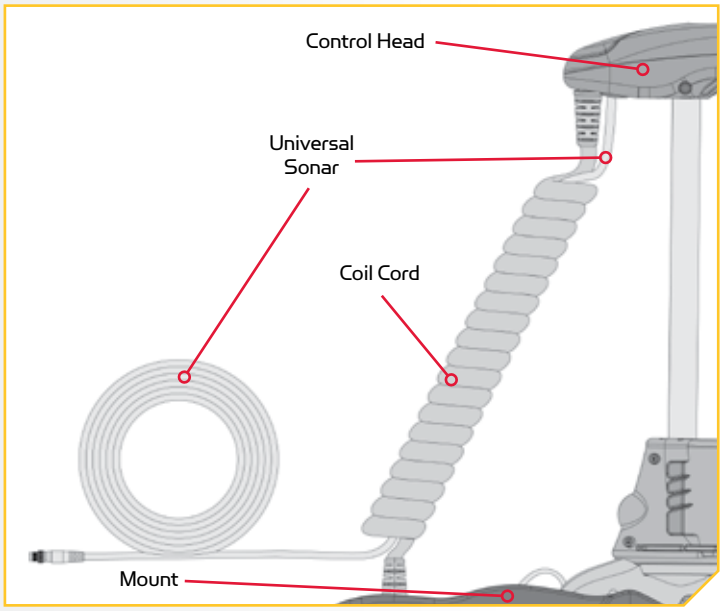

NOTE: If the cable length does not reach the desired fish finder installation location, a 14.5' extension cable is available (MKR-US2-11) (sold separately).

2

d. Align the pins of the Universal Sonar connector plug from the Control Head with the matching socket end of the appropriate Universal Sonar Extension Cable for your fish finder. Firmly push the connector plug into the socket of the Universal Sonar connection. Twist the locking collar until it is snug.

e. Connect the other end of your adapter plug to your fish finder following the manufacturer's instructions.

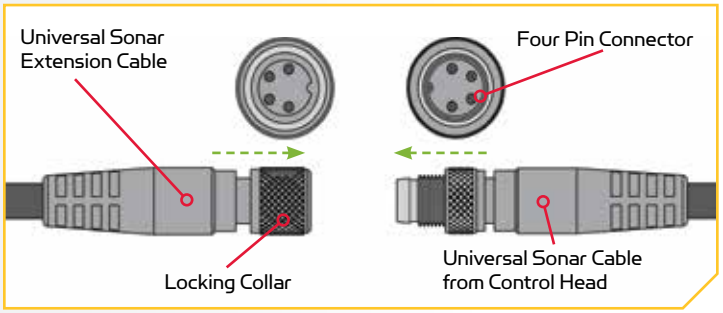

NOTE: The connectors are keyed to prevent reversed installation.

Installing the Prop

1

ITEM(S) NEEDED

#21 x 1 | #19 x 1 | #20 x 1 | #18 x 1

⚠ CAUTION

Disconnect the motor from the battery before beginning any prop work.

a. Take the Drive Pin (Item #18) and slide it through the Hole in the Armature Shaft. Position the Drive Pin horizontal by grasping the Armature Shaft and rotating it with the Drive Pin in place.

b. Align the Propeller (Item #21) so it is also horizontal and parallel with the Drive Pin. Slide the Propeller onto the Armature Shaft and Drive Pin until it is seated against the lower unit.

c. Install the Prop Washer (Item #19) and the Prop Nut (Item #20) onto the end of the Armature Shaft.

d. Holding the end of the Armature Shaft with a Flat Blade Screwdriver, tighten the Prop Nut with a 9/16" Open End Wrench.

e. Tighten the Prop Nut 1/4 turn past snug to 25-35 in-lbs.

⚠ CAUTION

Do not over tighten as this can damage the prop.

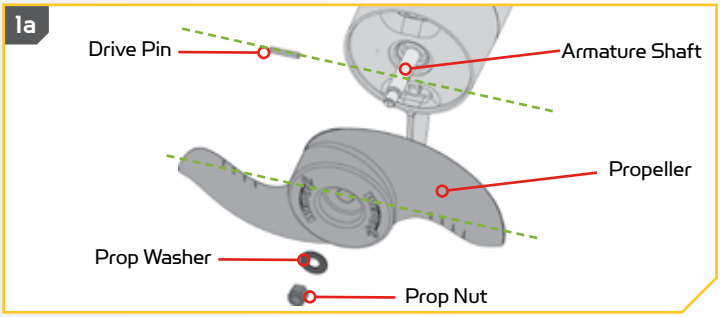

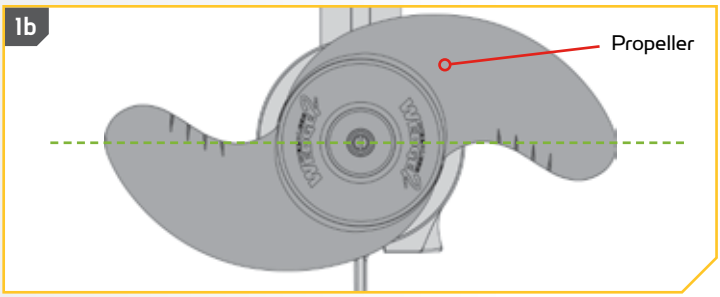

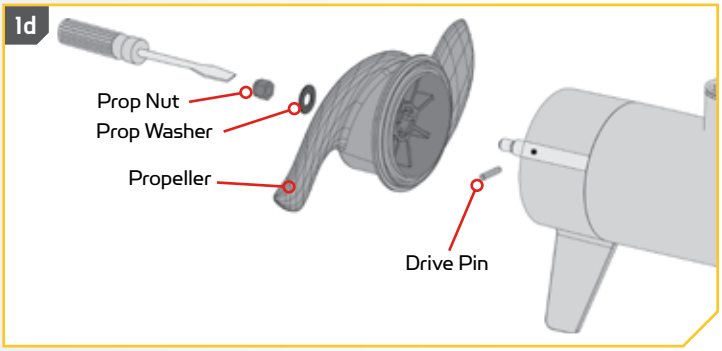

Stowing and Deploying the Motor with the Foot Pedal

Use the following procedure to stow and deploy the motor. Keep in mind that if your motor is stalling at a 45-degree angle when attempting to stow, this indicates that batteries are too low to fully stow the motor. If this occurs, reengage power, deploy the motor, trim the motor to its highest setting, and turn power off until batteries can be recharged. Once batteries are charged, attempt to stow motor again.

NOTE: To stow and deploy the Ulterra with the i-Pilot or i-Pilot Link remote, please refer to the corresponding product literature.

1

a. Locate the Indicator Panel at the base of the Mount.

b. Make sure that the motor is on by checking that the green LED next to the System Ready Indicator is on.

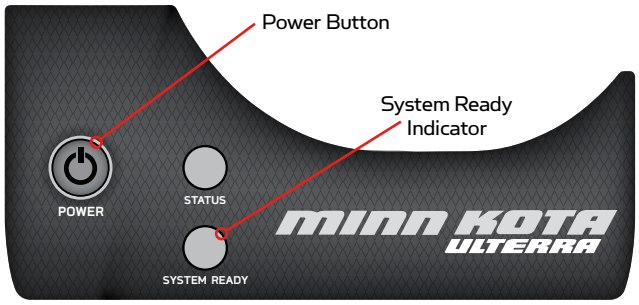

2

c. On the Foot Pedal, press the Mode Button until the amber LED in the center of the Indicator Panel on the Foot Pedal is illuminated. This puts the Foot Pedal in Ulterra Mode.

NOTE: You can only stow and deploy your motor while in Ulterra mode.

d. To deploy the motor, when it is stowed, double press the Stow/Deploy button. To stow the motor, when it is deployed, press the Stow/Deploy button.

WARNING

When stowing or deploying the motor, keep fingers clear of all hinges, pivot points and all moving parts. When stowing and deploying the motor, ensure that it doesn't contact the boat, trailer, or any other obstruction.

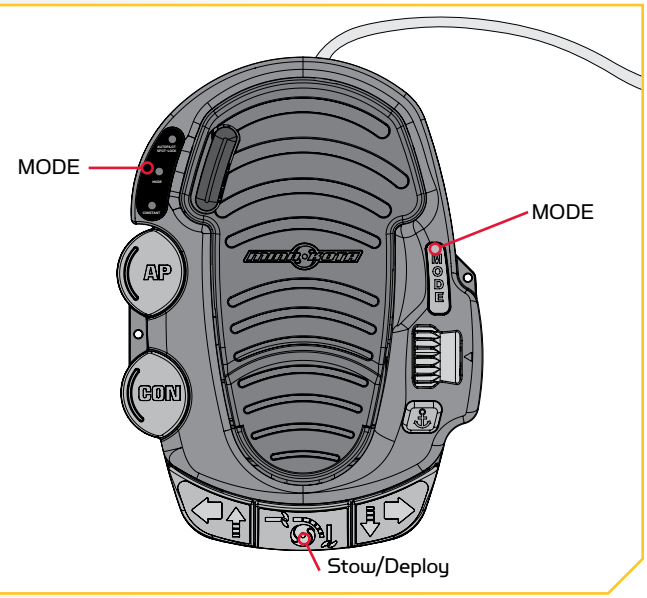

NOTE: The deploy sequence can be stopped at any time pressing the stow/deploy button. The stow sequence can be stopped at any time by pressing either trim button or the stow/deploy button.

Deploying the Motor with i-Pilot

1

a. Press the Home button.

b. Use the Menu Up and Menu Down buttons to find the Deploy menu at the bottom of the display screen.

NOTE: The Deploy menu at the bottom of the display screen can only be found when the motor is stowed.

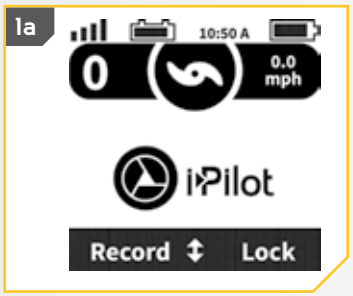

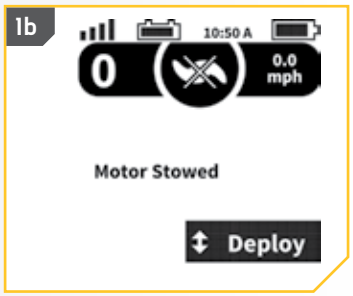

2

c. Use the Right Softkey to select the Deploy menu by double pressing it. Once selected the motor will automatically deploy.

WARNING

As soon as the Deploy menu is selected, the motor will automatically deploy. Be sure the motor is clear from obstructions and has a clear path of travel. The Prop is disabled while the motor is stowed and being deployed to prevent accidental contact with the rotating propeller.

d. While the Motor is deploying, it is possible to stop the action. Use either the Left Softkey to select the Stow menu or the Right Softkey to select the Pause menu.

e. If the Motor continues, it will complete the deploy process, normal motor operation will follow.

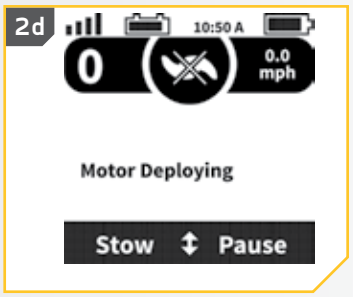

Stowing the Motor with i-Pilot

1

a. Press the Home button.

b. Use the Menu Up and Menu Down buttons to find the Stow menu at the bottom of the display screen.

NOTE: The Stow menu at the bottom of the display screen can only be found when the motor is deployed.

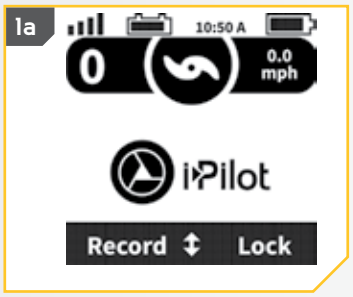

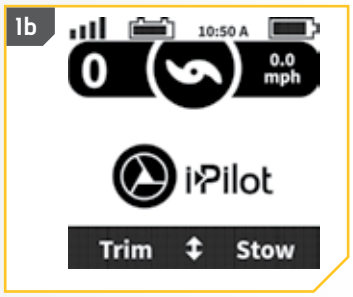

2

c. Use the Right Softkey to select the Stow menu. Once selected the motor will automatically stow.

WARNING

As soon as the Stow menu is selected, the motor will automatically stow. Be sure the motor is clear from obstructions and has a clear path of travel. The Prop is disabled while the motor is being stowed to prevent accidental contact with the rotating propeller.

d. While the Motor is stowing, it is possible to stop the action. Use either the Left Softkey to select the Deploy menu or the Right Softkey to select the Pause menu.

e. If the Motor continues, it will complete the Stow process and the Prop will be disabled.

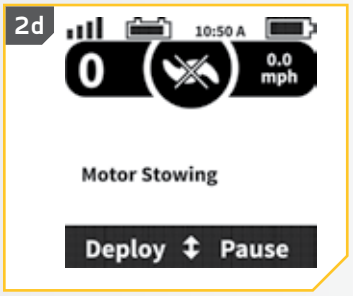

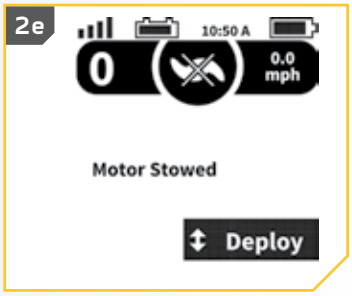

Deploying the Motor with i-Pilot Link

1

a. Press the Home button.

b. Scroll through the Content Area using either your finger or the Screen Navigation button to find the Ulterra button.

c. Select the Ulterra button using either your finger or by pressing the Ok button to open the Ulterra Menu.

NOTE: The Ulterra button can only be found in the Content Area with the Home Control Buttons on i-Pilot Link systems on an Ulterra motor. Certain Home Screen Buttons may be locked out while the motor is stowed because those functions require the motor to be deployed to operate.

2

d. Once in the Ulterra Menu, find the Deploy button and select it. The Deploy button requires a double press to engage.

WARNING

As soon as the Deploy button is selected, the motor will automatically deploy. Be sure the motor is clear from obstructions and has a clear path of travel. The Prop is disabled while the motor is stowed and being deployed to prevent accidental contact with the rotating propeller.

e. The Ulterra motor will deploy. While the Motor is deploying, it is possible to pause the action. To pause the action, find the Pause button and select it.

f. To resume the Deploy action, select the Deploy button.

g. If the Motor continues, it will complete the deploy process and normal motor operation will follow.

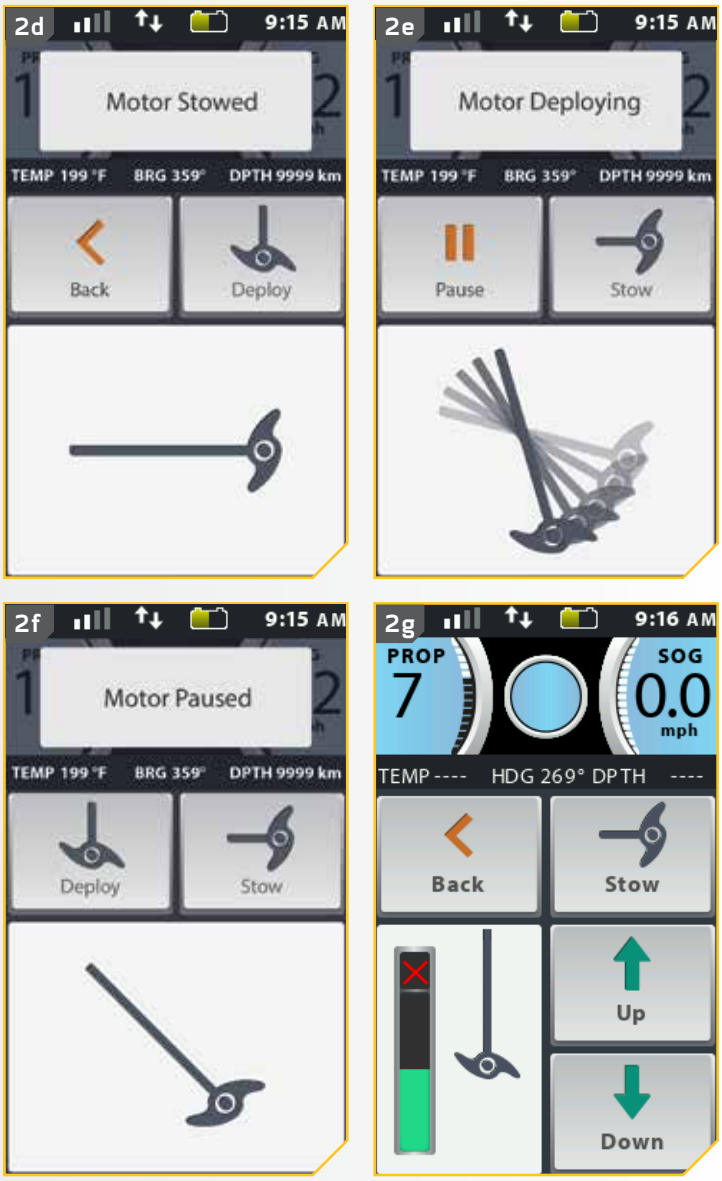

Stowing the Motor with i-Pilot Link

1

a. Press the Home button.

b. Scroll through the Content Area using either your finger or the Screen Navigation button to find the Ulterra button.

c. Select the Ulterra button using either your finger or by pressing the Ok button to open the Ulterra Menu.

NOTE: The Ulterra button can only be found in the Content Area with the Home Control Buttons on i-Pilot Link systems on an Ulterra motor. The motor can only be stowed when it is currently deployed.

2

d. Once in the Ulterra Menu, find the Stow button and select it.

NOTE: The Stow button can only be found when the motor is deployed.

WARNING

As soon as the Stow button is selected, the motor will automatically stow. Be sure the motor is clear from obstructions and has a clear path of travel. The Prop is disabled while the motor is being stowed to prevent accidental contact with the rotating propeller.

e. The Ulterra motor will stow. While the Motor is stowing, it is possible to pause the action. To pause the action, find the Pause button and select it.

BATTERY & WIRING INSTALLATION

BOAT RIGGING & PRODUCT INSTALLATION

For safety and compliance reasons, we recommend that you follow American Boat and Yacht Council (ABYC) standards when rigging your boat. Altering boat wiring should be completed by a qualified marine technician. The following specifications are for general guidelines only:

⚠ CAUTION

These guidelines apply to general rigging to support your Minn Kota motor. Powering multiple motors or additional electrical devices from the same power circuit may impact the recommended conductor gauge and circuit breaker size. If you are using wire longer than that provided with your unit, follow the conductor gauge and circuit breaker sizing table below. If your wire extension length is more than 25 feet, we recommend that you contact a qualified marine technician.

⚠ CAUTION

An over-current protection device (circuit breaker or fuse) must be used. Coast Guard requirements dictate that each ungrounded current-carrying conductor must be protected by a manually reset, trip-free circuit breaker or fuse. The type (voltage and current rating) of the fuse or circuit breaker must be sized accordingly to the trolling motor used. The table below gives recommended guidelines for circuit breaker sizing.

CONDUCTOR GAUGE AND CIRCUIT BREAKER SIZING TABLE

This conductor and circuit breaker sizing table is only valid for the following assumptions:

1. No more than 2 conductors are bundled together inside of a sheath or conduit outside of engine spaces.
2. Each conductor has 105° C temp rated insulation.
3. No more than 5% voltage drop allowed at full motor power based on published product power requirements.

Motor Thrust / Model	Max Amp Draw	Circuit Breaker	Wire Extension Length				
			5 feet	10 feet	15 feet	20 feet	25 feet
30 lb.	30	50 Amp @ 12 VDC	10 AWG	10 AWG	8 AWG	6 AWG	4 AWG
40 lb., 45 lb.	42		10 AWG	8 AWG	6 AWG	4 AWG	4 AWG
50 lb., 55 lb.	50	60 Amp @ 12 VDC	8 AWG	6 AWG	4 AWG	4 AWG	2 AWG
70 lb.	42	50 Amp @ 24 VDC	10 AWG	10 AWG	8 AWG	8 AWG	6 AWG
80 lb.	56	60 Amp @ 24 VDC	8 AWG	8 AWG	8 AWG	6 AWG	6 AWG
101 lb.	46	50 Amp @ 36 VDC	8 AWG	8 AWG	8 AWG	8 AWG	8 AWG
Engine Mount 101	50	60 Amp @ 36 VDC	8 AWG	6 AWG	4 AWG	4 AWG	2 AWG
112 lb.	52	60 Amp @ 36 VDC	8 AWG	8 AWG	8 AWG	8 AWG	8 AWG
Engine Mount 160	116	(2) x 60 Amp @ 24 VDC	2 AWG	2 AWG	2 AWG	2 AWG	2 AWG
E-Drive	40	50 Amp @ 48 VDC	10 AWG	10 AWG	10 AWG	10 AWG	10 AWG

NOTE: Wire Extension Length refers to the distance from the batteries to the trolling motor leads. Consult website for available thrust options. Maximum Amp Draw values only occur intermittently during select conditions and should not be used as continuous amp load ratings.

Reference

United States Code of Federal Regulations: 33 CFR 183 – Boats and Associated Equipment ABYC E-11: AC and DC Electrical Systems on Boats

SELECTING THE CORRECT BATTERIES

The motor will operate with any lead acid, deep cycle marine 12 volt battery/batteries. For best results, use a deep cycle, marine battery with at least a 105 amp-hour rating. Maintain battery at full charge. Proper care will ensure having battery power when you need it, and will significantly improve the battery life. Failure to recharge lead-acid batteries (within 12-24 hours) is the leading cause of premature battery failure. Use a multi-stage charger to avoid overcharging. We offer a wide selection of chargers to fit your charging needs. If you are using a crank battery to start a gasoline outboard, we recommend that you use a separate deep cycle marine battery/batteries for your Minn Kota trolling motor. For more information on battery selection and rigging, please visit minnkotamotors.com.

⚠ WARNING

Never connect the (+) and the (–) terminals of the same battery together. Take care that no metal object can fall onto the battery and short the terminals. This would immediately lead to a short and extreme fire danger.

⚠ CAUTION

Refer to "Conductor Gauge and Circuit Breaker Sizing Table" in the previous section to find the appropriate circuit breaker or fuse for your motor. For motors requiring a 60-amp breaker, the Minn Kota MKR-19 60-amp circuit breaker is recommended.

⚠ CAUTION

Please read the following information before connecting your motor to your batteries in order to avoid damaging your motor and/or voiding your warranty.

ADDITIONAL CONSIDERATIONS

Using DC or Alternator Chargers

Your Minn Kota trolling motor may be designed with an internal bonding wire to reduce sonar interference. Most alternator charging systems do not account for this bonding wire, and connect the negative posts of the trolling motor batteries to the negative posts of the crank/starting battery. These external connections can damage connected electronics and the electrical system of your trolling motor, voiding your warranty. Review your charger's manual carefully or consult the manufacturer prior to use to ensure your charger is compatible.

Minn Kota recommends using Minn Kota brand chargers to recharge the batteries connected to your Minn Kota trolling motor, as they have been engineered to work with motors that include a bonding wire.

Additional Accessories Connected to Trolling Motor Batteries

Significant damage to your Minn Kota motor, your boat electronics, and your boat can occur if incorrect connections are made between your trolling motor batteries and other battery systems. Minn Kota recommends using an exclusive battery system for your trolling motor. Where possible, accessories should be connected to a separate battery system. Radios and sonar units should not be connected to any trolling motor battery systems as interference from the trolling motor is unavoidable. If connecting any additional accessories to any trolling motor battery system, or making connections between the trolling motor batteries and other battery systems on the boat, be sure to carefully observe the information that follows.

The negative (-) connection must be connected to the negative terminal of the same battery that the trolling motor negative lead connects to. In the diagrams below this battery is labeled "Low Side" Battery. Connecting to any other trolling motor battery will input positive voltage into the "ground" of that accessory, which can cause excess corrosion. Any damage caused by incorrect connections between battery systems will not be covered under warranty.

Automatic Jump Start Systems and Selector Switches

Automatic jump start systems and selector switches tie the negatives of the connected batteries together. Connecting these systems to the "High Side" Battery or "Middle" Battery in the diagrams below and will cause significant damage to your trolling motor and electronics. The only trolling motor battery that is safe to connect to one of these systems is the "Low Side" Battery.

NOTE: The internal bonding wire is equipped with a 3 amp fuse. Improper connections described above carrying in excess of 3 amps will blow this fuse and no further damage will be exhibited. If this occurs, RF interference from the trolling motor affecting sonar units and other electronics will be more significant. If the fuse is blown the wiring error should be found and addressed prior to replacing the fuse. The replacement fuse should be 3 amps or less. An intact fuse does not imply correct rigging; significant damage can be done by incorrect wiring without approaching 3 amps of current.

CONNECTING THE BATTERIES IN SERIES (IF REQUIRED FOR YOUR MOTOR)

24 Volt Systems

Two 12 volt batteries are required. The batteries must be wired in series, only as directed in wiring diagram, to provide 24 volts.

1. Make sure that the motor is switched off (speed selector on "0").
2. Connect a connector cable to the positive (+) terminal of battery 1 and to the negative (–) terminal of battery 2.
3. Connect positive (+) red motor lead to positive (+) terminal on battery 2.
4. Connect negative (–) black motor lead to negative (–) terminal of battery 1.

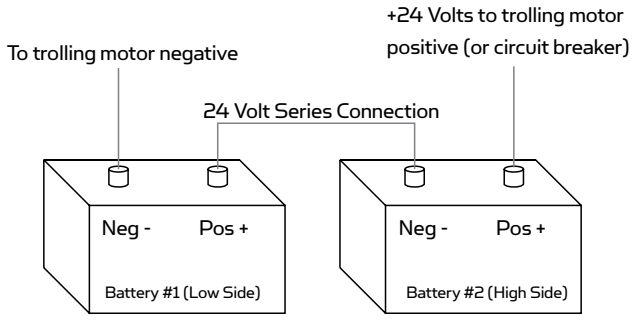

Two 12-volt batteries connected in series for 24 volts

WARNING

For safety reasons do not switch the motor on until the propeller is in the water. If installing a leadwire plug, observe proper polarity and follow instructions in your boat owner's manual.

WARNING

- For safety reasons, disconnect the motor from the battery or batteries when the motor is not in use or while the battery/batteries are being charged.
- Improper wiring of 24/36 volt systems could cause battery explosion.
- Keep leadwire wing nut connections tight and solid to battery terminals.
- Locate battery in a ventilated compartment.

36 Volt Systems

Three 12 volt batteries are required. The batteries must be wired in series, only as directed in wiring diagram, to provide 36 volts.

1. Make sure that the motor is switched off (speed selector on "0").
2. Connect a connector cable to the positive (+) terminal of battery 1 and to the negative (–) terminal of battery 2 and another connector cable from the positive (+) terminal of battery 2 to the negative (–) terminal of battery of battery 3.
3. Connect positive (+) red motor lead to positive (+) terminal on battery 3.
4. Connect negative (–) black motor lead to negative (–) terminal of battery 1.

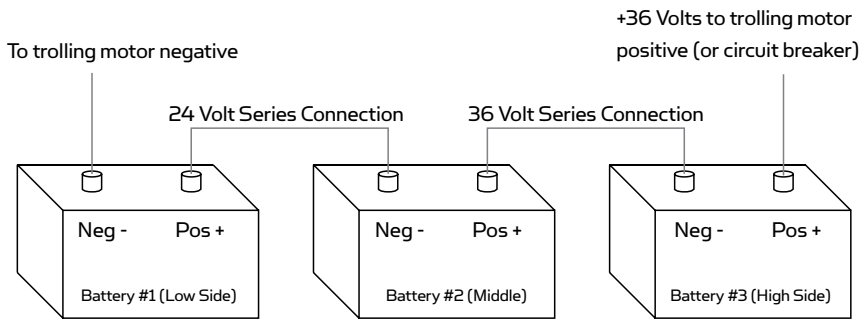

Three 12-volt batteries connected in series for 36 volts

WARNING

For safety reasons do not switch the motor on until the propeller is in the water. If installing a leadwire plug, observe proper polarity and follow instructions in your boat owner's manual.

WARNING

- For safety reasons, disconnect the motor from the battery or batteries when the motor is not in use or while the battery/batteries are being charged.
- Improper wiring of 24/36 volt systems could cause battery explosion.
- Keep leadwire wing nut connections tight and solid to battery terminals.
- Locate battery in a ventilated compartment.

This completes the installation of your Ulterra. A complete Owner's Manual can be downloaded at minnkotamotors.com.

NOTES

RECOMMENDED ACCESSORIES

ON-BOARD & PORTABLE BATTERY CHARGERS

Stop buying new batteries and start taking care of the ones you've got. Many chargers can actually damage your battery over time – creating shorter run times and shorter overall life. Digitally controlled Minn Kota chargers are designed to provide the fastest charge that protect and extend battery life.

MK212PC

MK210D

MK110P

TALON SHALLOW WATER ANCHOR

Talon deploys faster, holds stronger and runs quieter than any other shallow water anchor. Available in depths up to 12' and bold color options including camo, it boasts an arsenal of features and innovations that no other anchor can touch:

- Vertical, Multi-Stage Deployment
- User-Selectable Anchoring Modes
- 2x Anchoring Force
- Fast Deploy
- Auto Up/Down
- Triple Debris Shields
- Built-In Wave Absorption
- Noise Dissipation
- Versatile Adjustments

MINN KOTA ACCESSORIES

We offer a wide variety of trolling motor accessories, including:

- 60-Amp Circuit Breaker
- Mounting Brackets
- Stabilizer Kits
- Extension Handles
- Battery Connectors
- Battery Boxes
- Quick Connect Plugs

For a complete listing of Minn Kota accessories, visit minnkotamotors.com **Follow us:**

minnkotamotors.com

Minn Kota Consumer & Technical Service
Johnson Outdoors Marine Electronics, Inc.
PO Box 8129
Mankato, MN 56001

121 Power Drive
Mankato, MN 56001
Phone (800) 227-6433
Fax (800) 527-4464

Part #2207113 ECN 38208 Rev D 08/17

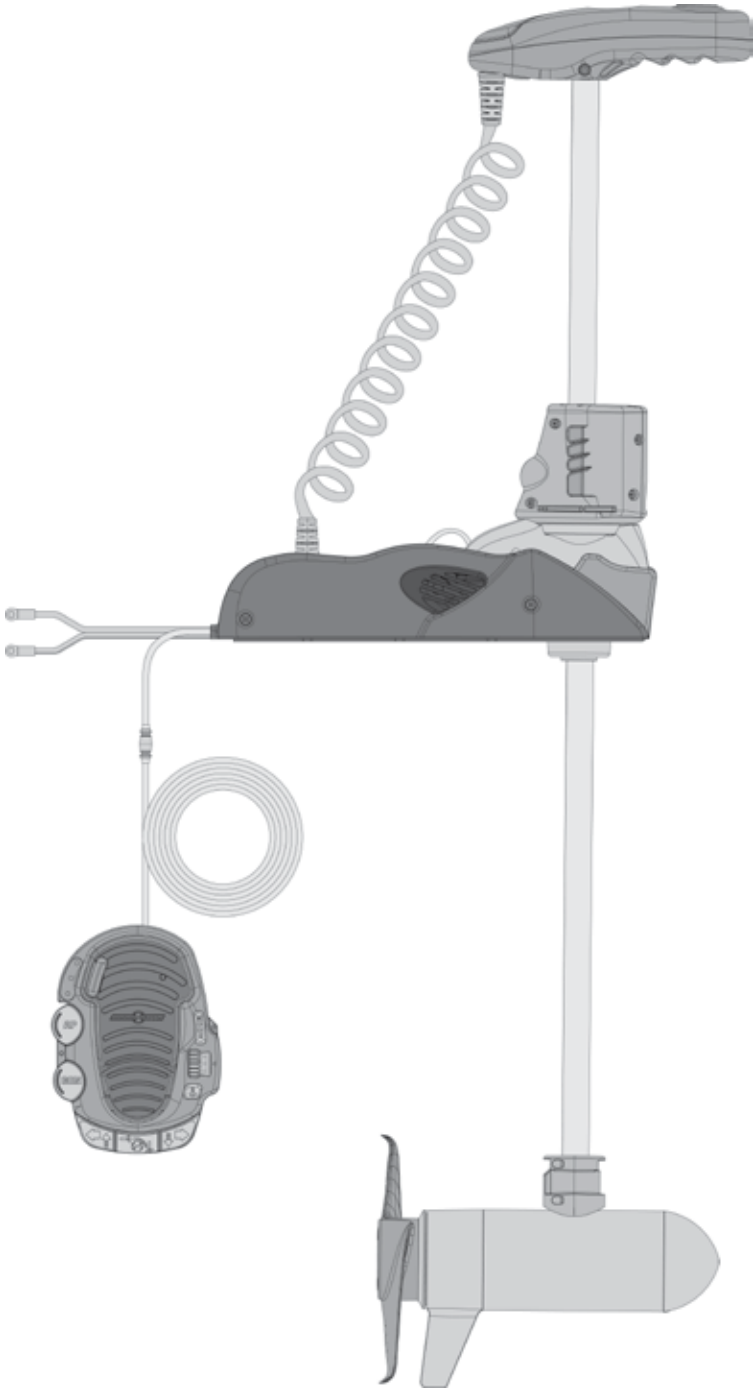

ULTERRA™

PROPULSEUR ÉLECTRIQUE MONTÉ SUR L'ÉTRAVE

INSTRUCTIONS D'INSTALLATION

INTRODUCTION

MERCI

Nous vous remercions d'avoir choisi Minn Kota. Nous sommes persuadés que vous devriez consacrer plus de temps à pêcher et moins de temps à amarrer votre embarcation. C'est pourquoi nous construisons les propulseurs électriques les plus intelligents, les plus solides et les plus faciles à utiliser. Chaque aspect d'un propulseur électrique Minn Kota est réfléchi et étudié jusqu'à ce qu'il soit digne de porter notre nom. Nous avons investi des heures incalculables de recherche et d'essais pour vous offrir les avantages caractéristiques de Minn Kota, qui vous mène vraiment n'importe où, et n'importe quand. Notre principe est simple, nous faisons les choses selon les règles. Nous sommes Minn Kota. Et nous ne cesserons jamais de vous aider à pêcher plus de poissons.

ENREGISTREMENT

N'oubliez pas de conserver votre reçu et d'enregistrer immédiatement votre propulseur électrique. Une fiche d'enregistrement est fournie avec votre moteur; vous pouvez également effectuer l'enregistrement sur notre site Web à minnkotamotors.com.

NUMÉRO DE SÉRIE

Le numéro de série à 11 caractères Minn Kota est très important. Cela permet de déterminer le modèle spécifique et l'année de fabrication. Lorsque vous contactez le Service à la clientèle ou que vous enregistrez votre article, vous aurez besoin du numéro de série de votre article. Nous vous suggérons de noter le numéro de série afin qu'il soit disponible à des fins de référence future.

REMARQUE: Le numéro de série de votre Ulterra se trouve à l'intérieur du support de montage, sous le point d'appui du moteur.

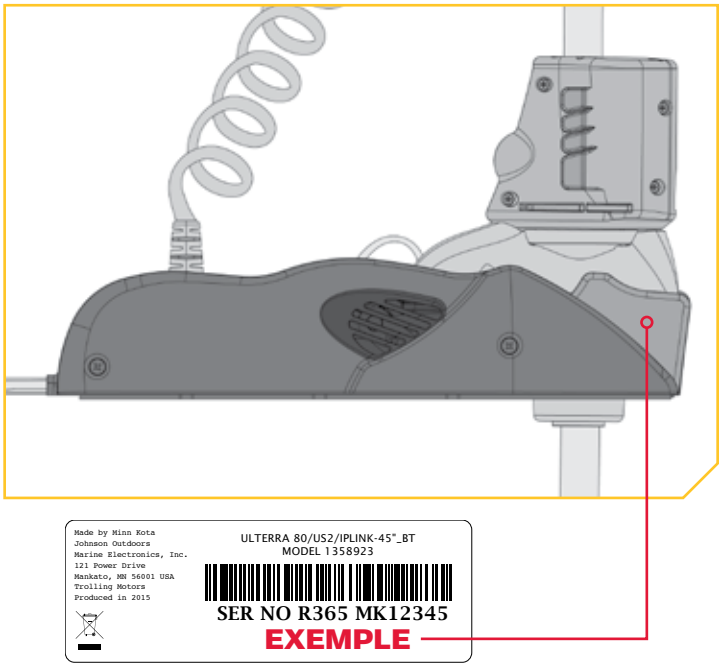

INFORMATION SUR LE MOTEUR (À DES FINS DE RÉFÉRENCE PAR LE CLIENT SEULEMENT)

Modèle: _____

Numéro de Série: _____

Date de l'achat: _____

Magasin où l'achat a été effectué: _____

REMARQUE: Ne retournez pas votre moteur Minn Kota au détaillant. Le détaillant n'est pas autorisé à réparer ou à remplacer cet appareil. Pour le service : communiquer avec Minn Kota au (800) 227-6433; retourner le moteur au Centre de service de l'usine de Minn Kota; envoyer ou apporter le moteur à un centre de service agréé de Minn Kota. Une liste de centres de service agréés est disponible sur notre site Web, à minnkotamotors.com. Pour obtenir un service au titre de la garantie, y compris toutes les options susmentionnées, veuillez inclure la preuve d'achat, le numéro de série et la date de l'achat.

CONSIGNES DE SÉCURITÉ

Veuillez lire attentivement le manuel de l'utilisateur. Suivez toutes les instructions, et respectez toutes les consignes de sécurité et mises en garde. L'utilisation de ce moteur n'est autorisée que pour les personnes qui ont lu et compris ces consignes pour l'utilisateur. Les personnes mineures peuvent utiliser ce moteur uniquement sous la supervision d'un adulte.

⚠ AVERTISSEMENT

Vous seul êtes responsable de la navigation sécuritaire et prudente sur votre bateau. Nous avons conçu votre Minn Kota pour qu'il soit un outil précis et fiable qui vous permettra d'améliorer l'utilisation de votre bateau et d'accroître votre capacité de pêcher des poissons. Ce produit ne vous exonère pas de la responsabilité de naviguer en toute sécurité avec votre bateau. Vous devez éviter les dangers liés à la navigation et toujours exercer une veille permanente afin de pouvoir réagir au fur et à mesure que les situations se présentent. Vous devez toujours être prêt à reprendre le contrôle manuel de votre bateau. Apprenez à utiliser votre Minn Kota dans une zone exempte de dangers et d'obstacles.

⚠ AVERTISSEMENT

Ne faites jamais fonctionner le moteur hors de l'eau, puisque cela entraînerait des blessures causées par l'hélice en rotation. Le moteur doit être débranché de la source d'alimentation lorsqu'il n'est pas utilisé ou lorsqu'il est hors de l'eau. Au moment de brancher les câbles d'alimentation du moteur à la batterie, veiller à ce qu'ils ne soient pas entortillés ou exposés au frottement, puis les placer de telle manière que personne ne risque de trébucher. Avant d'utiliser le moteur, s'assurer que l'isolant des câbles d'alimentation n'est pas endommagé. Ne pas tenir compte de ces mesures de sécurité peut entraîner des courts-circuits avec les batteries et/ou le moteur. Toujours débrancher le moteur des batteries avant le nettoyage ou la vérification de l'hélice. Éviter de submerger complètement le moteur, car l'eau pourrait pénétrer dans l'appareil inférieur par la tête de contrôle et l'arbre. Si le moteur est utilisé alors que de l'eau est présente dans l'appareil inférieur, ce dernier pourrait subir des dommages considérables. Ces dommages ne seront pas couverts par la garantie.

⚠ AVERTISSEMENT

Veillez à ce que ni vous, ni les autres personnes ne s'approchent trop près de l'hélice en rotation, que ce soit seulement avec une partie du corps ou des objets. Le moteur est puissant et pourrait provoquer des situations périlleuses ou des blessures, pour vous ou les autres. Lorsque le moteur est en marche, se méfier des objets flottants ou des personnes qui pourraient être en train de nager. Les personnes, dont les réactions ou la capacité à faire fonctionner le moteur est/sont affaiblie (s) par l'alcool, la drogue, les médicaments ou d'autres substances, ne sont pas autorisées à utiliser ce moteur. Ce moteur n'est pas adapté à l'utilisation dans de forts courants. Le niveau de pression sonore constant du moteur au moment de l'utilisation est inférieur à 70 dB (A). Le niveau de vibration général ne dépasse pas 2,5 m/s^2.

⚠ AVERTISSEMENT

Lorsque vous remontez ou abaissez le moteur, gardez vos doigts loin de toutes charnières et tous points de pivot ainsi que de toutes pièces mobiles. En cas d'opération imprévue, retirez les câbles d'alimentation à la batterie.

⚠ AVERTISSEMENT

Il est recommandé d'utiliser exclusivement les accessoires approuvés par Johnson Outdoors avec votre moteur Minn Kota. L'utilisation d'accessoires non approuvés, y compris pour monter ou contrôler votre moteur, pourrait causer des dommages, un fonctionnement inattendu du moteur et des blessures. Veillez à utiliser le produit ainsi que les accessoires approuvés, y compris les télécommandes, en toute sécurité et de la manière indiquée pour éviter les accidents ou un fonctionnement inattendu du moteur. Ne retirez pas les pièces installées en usine, y compris les couvercles, boîtiers et protections du moteur et des accessoires.

CONNAISSEZ VOTRE BATEAU

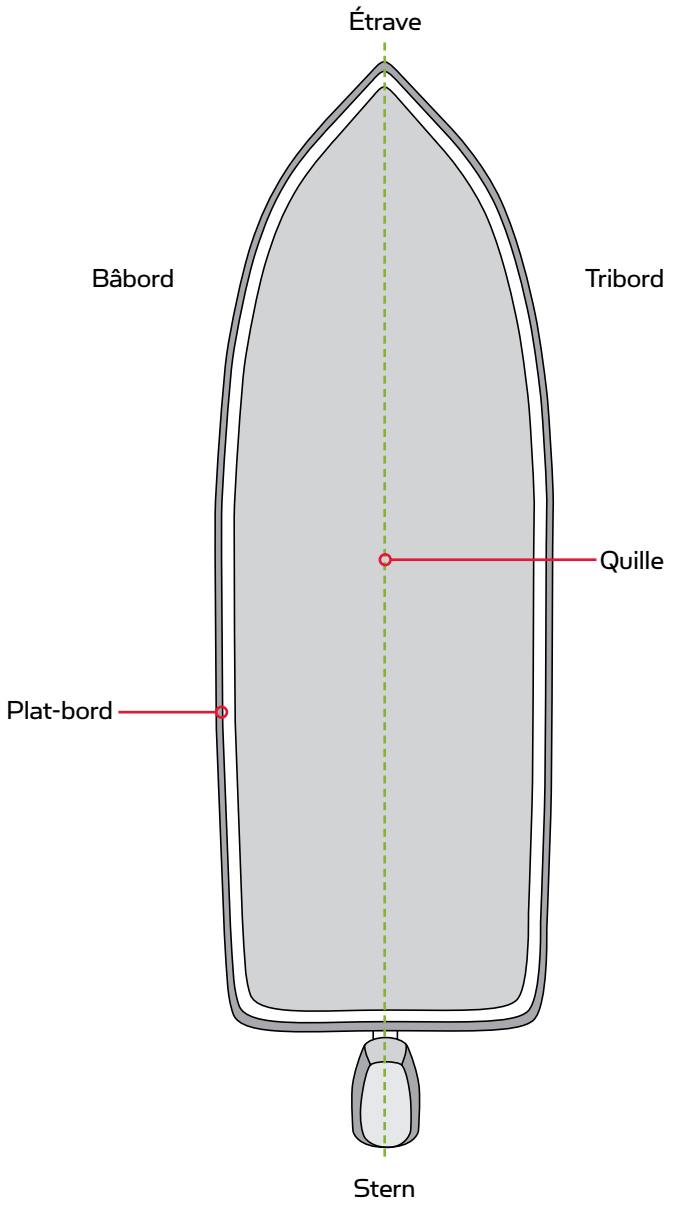

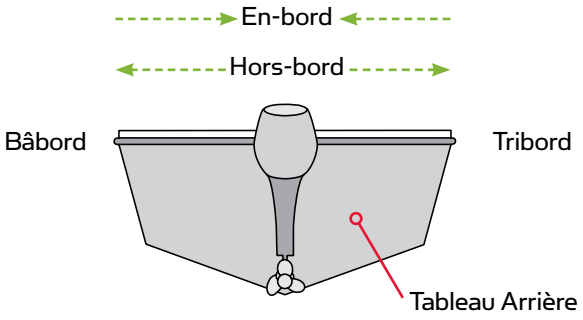

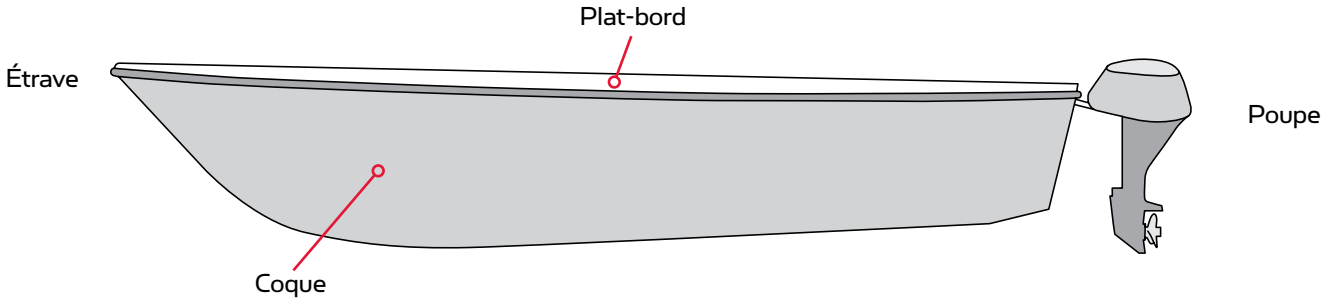

INSTALLATION

INSTALLATION DE L'ULTERRA

Votre nouveau Ulterra est offert avec tout ce dont vous aurez besoin pour le montage au bateau. Ce moteur peut être monté directement sur le bateau ou couplé avec un support à dégagement rapide Minn Kota pour un montage et un démontage simples. Pour l'installation avec un support à dégagement rapide, vous reporter aux directives d'installation fournies avec le support. Pour obtenir des supports de montage à dégagement rapide, veuillez visiter minnkotamotors.com. Pour installer le moteur directement sur le bateau, veuillez suivre les directives fournies avec ce manuel. Avant de commencer, veuillez examiner la liste des pièces et des outils nécessaires à l'installation. Pour obtenir davantage de soutien pour les produits et trouver le revendeur le plus près, veuillez visiter minnkotamotors.com.

LISTE DE PIÈCES D'INSTALLATION

Article/ Assemblage	Nº de Pièce	Description	Qté.
1	✖	MOTOR ASSEMBLY	1
AA	2994859	BAG ASY-TERROVA/V2,RUB.BUMPERS	1
2	2325110	PAD, FOOTPEDAL	5
BB	2994917	BAG ASSY, ULTERRA MTG HARDWARE	1
3	2203430	SCREW-1/4-20 X 2.0 HHCS SS	6
4	2203431	SCREW-1/4-20 X 0.5 HHCS SS	6
5	2201725	WASHER-CLIPPED, 1/4", 1.00" OD	6
6	2261713	WASHER-1/4 FLAT 18-8 SS	6
7	2263103	NUT-1/4-20 NYLOCK SS	6
8	2301720	WASHER-MOUNTING - RUBBER	6
9	2203800	STRAP, HOLD DOWN	1
10	2994075 ♦	REMOTE ASSEMBLY, IPILOT	1
11	2994076 ♦	REMOTE ASSEMBLY LINK TOUCHSCREEN	1
▲	2397101 ♦	MANUAL, QUICK REF., iPILOT 1.6	1
▲	2397103 ♦	MANUAL-QUICK REF., iPILOT 3.0	1
12	2390800 ♦	LANYARD, REMOTE W/ CARABINER	1
13	2373241 ♦	CABLE, USB REMOTE CHARGER LINK	1
14	2375901 ♦	ADAPTER, USB DC POWER LINK	1
15	2996400 ♦	HEADING SENSOR ASSEMBLY	1
16	490389-1 ♦	CABLE, ETH (M12-M-M12-F, 30'	1
17	2211415	CABLE-EXTENSION, PD/AP 110"	1
CC	1378132	80# THRUST PROP KIT	1
DD	1378160	112# THRUST PROP KIT	1
18	2262658	PIN-DRIVE 1" X 3/16" S/S	1
19	2091701	WASHER-PROP (LARGE) MAX101	1
20	2093101	NUT-PROP,NYLOC,LG,MX101 3/8 SS	1
21	2331160	PROP-WW2 (4") w/ADP.RING	1
	2341160	PROP-WW2 (4.5) w/ADP.RING	1
▲	2207113	MANUAL, INSTALL GUIDE, ULTERRA	1
22	2994740	FOOT PEDAL ASSY, ULTERRA	1

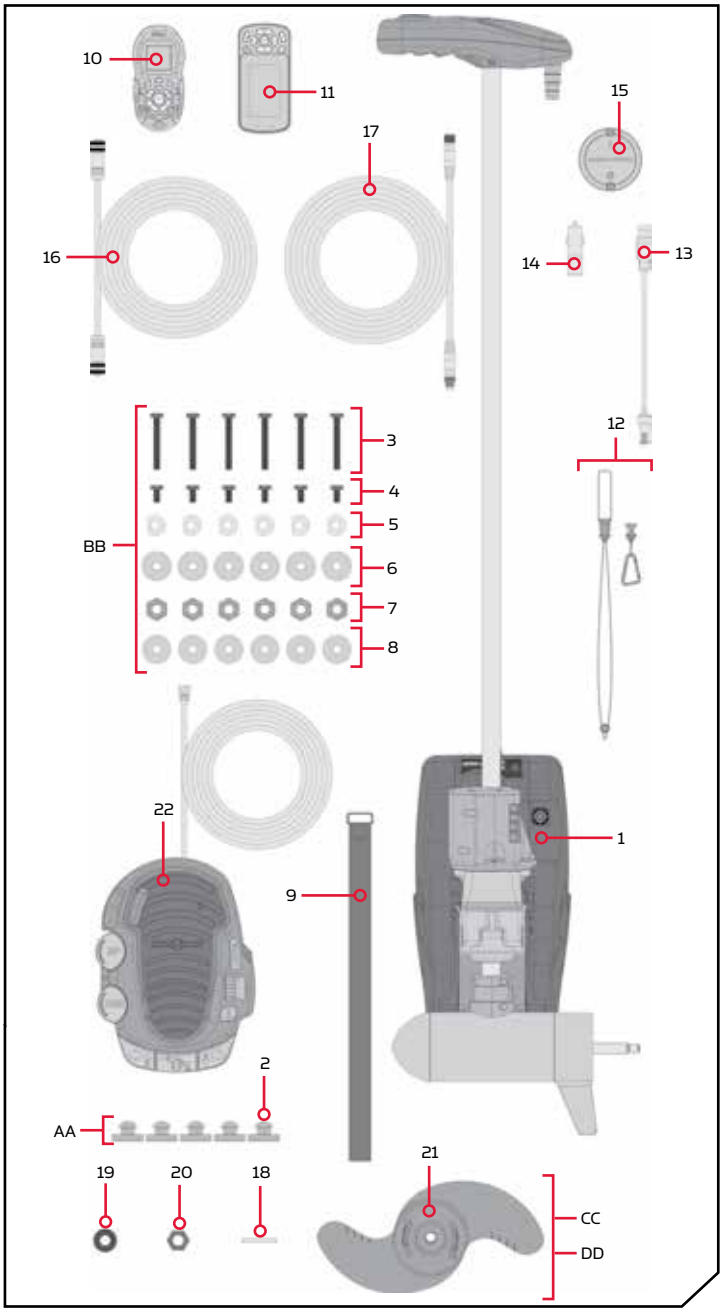

▲ N'est pas montrée sur le schéma des pièces.
✖ Cette pièce est incluse dans un ensemble et ne peut pas être commandée individuellement.
♦ Uniquement disponible avec les modèles possédant un système i-Pilot ou i-Pilot Link installé en usine.

FACTEURS DE MONTAGE

Il est recommandé de monter le moteur aussi près que possible de l'axe du bateau. Vérifiez que la zone sous l'emplacement pour percer des trous et installer des rondelles et des écrous est dégagée. Assurez-vous que le support du moteur est positionné assez loin du bord du bateau. Le moteur ne doit rencontrer aucune obstruction lorsqu'il est dans l'eau ou relevé. Envisagez l'installation d'un support à dégagement rapide ou un adaptateur. Pour la liste complète des accessoires, veuillez visiter minnkotamotors.com.

Découvrez les accessoires disponibles pour votre moteur de pêche à la traîne sur minnkotamotors.com.

OUTILS ET RESSOURCES NÉCESSAIRES

- Tournevis Phillips nº 2
- Tournevis Phillips nº 3
- Perceuse
- Mèche de 9/32 po (7,14 mm)
- Une personne pour vous aider avec l'installation

INSTALLATION

Installation de l'Ulterra

1

a. Placez le support sur une surface élevée, de niveau, comme un établi ou le hayon d'une camionnette. Le moteur, lorsque retiré de la boîte, devrait être en position arrimée.

b. Retirez les quatre vis de la de plaque latérale en utilisant un tournevis cruciforme nº 3 ou nº 2. Deux de ces vis seront situées de chaque côté du support.

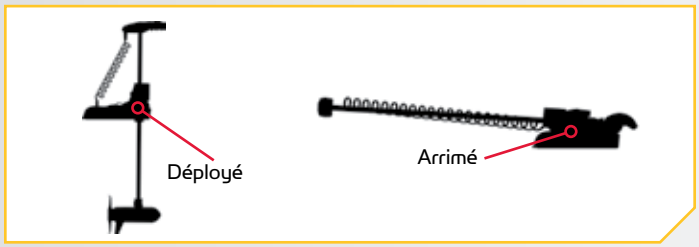

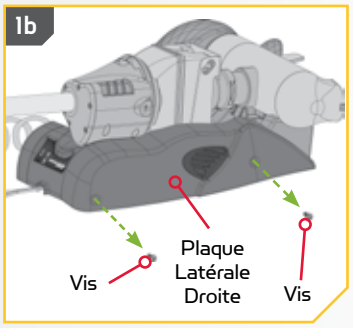

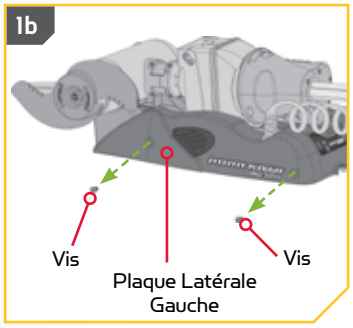

REMARQUE: Ce moteur pèse environ 70 lb (32 kg). Pour l'installation, nous recommandons de vous faire aider par une deuxième personne.

2

c. Retirez la plaque latérale droite pour accéder aux trous de montage.

d. Retirez la plaque latérale gauche pour accéder aux trous de montage.

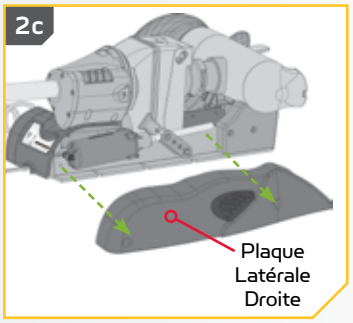

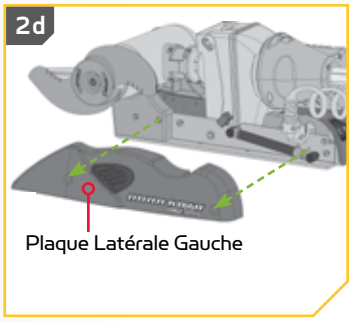

3

e. Sous la plaque latérale gauche, la prolongation de l'amortisseur bloque l'accès au trou de montage avant gauche.

f. À l'aide d'un petit tournevis, retirez les deux Serre-câbles de 5/16 po (8 mm) qui tiennent la prolongation de l'amortisseur en place. Lorsque les Serre-câbles sont retirés, faites glisser la prolongation de l'amortisseur du support pour exposer le trou de montage arrière gauche. Déposez les deux Serre-câbles et la prolongation de l'amortisseur dans un endroit sûr afin de ne pas les perdre avant d'être rassemblés plus tard dans l'installation.

⚠ AVERTISSEMENT

Ne déployez pas le moteur tant que l'installation n'est pas terminée sur le bateau. Les illustrations sont à titre de référence seulement. Le déploiement de votre moteur avant l'installation au bateau pourrait entraîner des blessures.

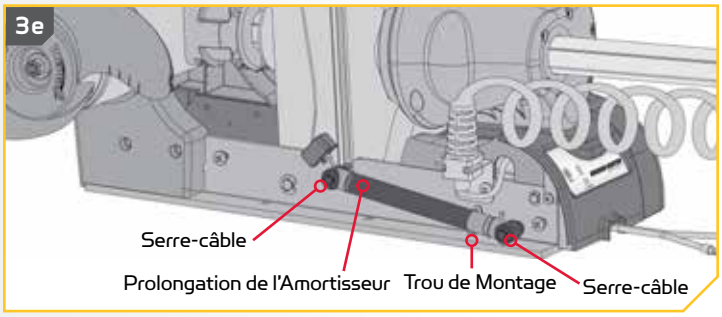

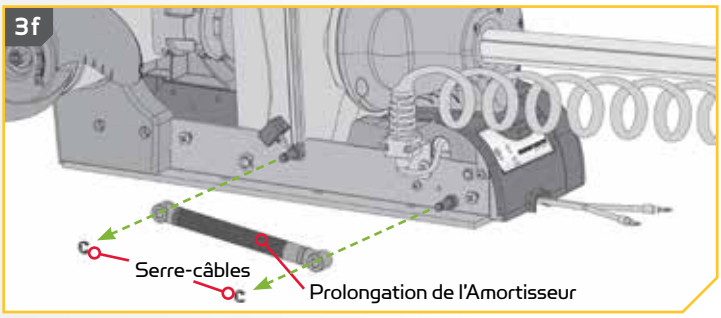

4

g. Assurez-vous que les câbles d'alimentation de la batterie sont déconnectés, ou que le disjoncteur, le cas échéant, est en position "arrêt".

⚠ AVERTISSEMENT

Assurez-vous que le moteur est installé sur une surface plane et n'est pas branché à une source d'alimentation.

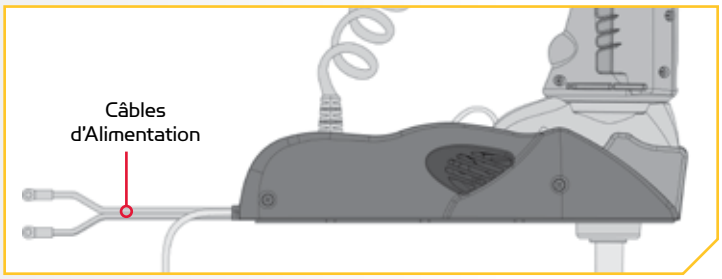

5

h. Placez le moteur en position sur le pont du bateau. Placez le moteur aussi près que possible de l'axe ou de la quille du bateau. Le moteur peut être installé soit sur le côté bâbord ou tribord du bateau, selon la préférence personnelle. Relisez les facteurs de montage au début de la section d'installation.

REMARQUE: la sangle d'urgence (article n° 9) est utilisée pour arrimer manuellement le moteur Ulterra. La sangle d'urgence n'est pas fixée pendant l'installation. Rangez-la sur votre bateau au cas où vous en auriez besoin pour arrimer manuellement le moteur. Pour apprendre comment, veuillez consulter la section « Arrimage manuel du moteur Ulterra »

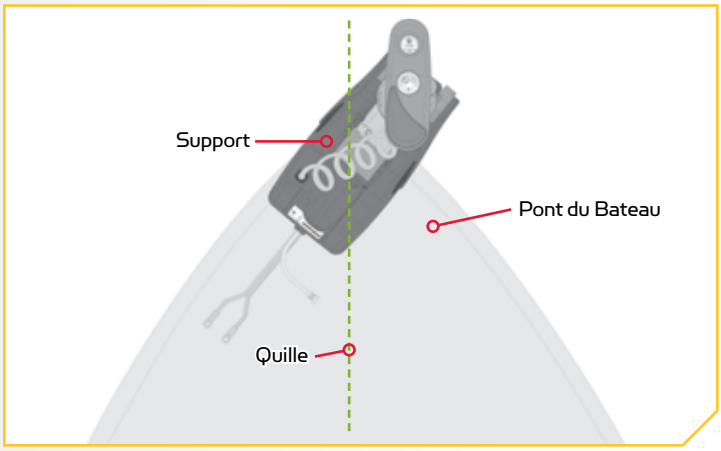

6

ARTICLE(S) REQUIS

- #8 x 6

⚠ AVERTISSEMENT

Ne déployez pas le moteur tant que l'installation n'est pas terminée sur le bateau. Les illustrations sont à titre de référence seulement. Le déploiement de votre moteur avant l'installation au bateau pourrait entraîner des blessures.

i. Assurez-vous que la fente sous l'extrusion de base est alignée à la partie extérieure du plat-bord du bateau. Cela assurera que l'arbre a un dégagement minimum de 1 1/2 po (3,8 cm) lorsqu'il est déployé. L'appareil inférieur, lorsqu'il est arrimé et déployé, ne doit pas rencontrer d'obstacles.

j. Assurez-vous que le support est de niveau. Au besoin, utilisez les rondelles de caoutchouc (article nº 8) pour créer une surface au niveau.

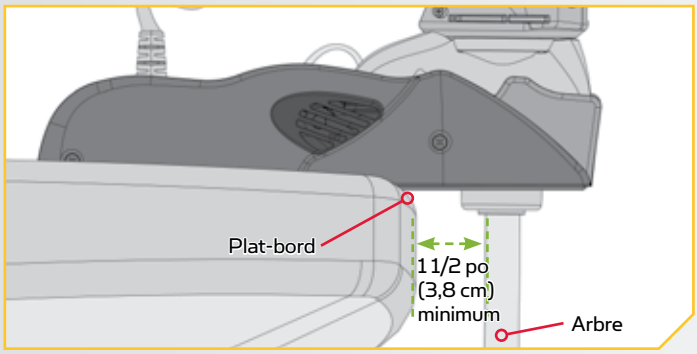

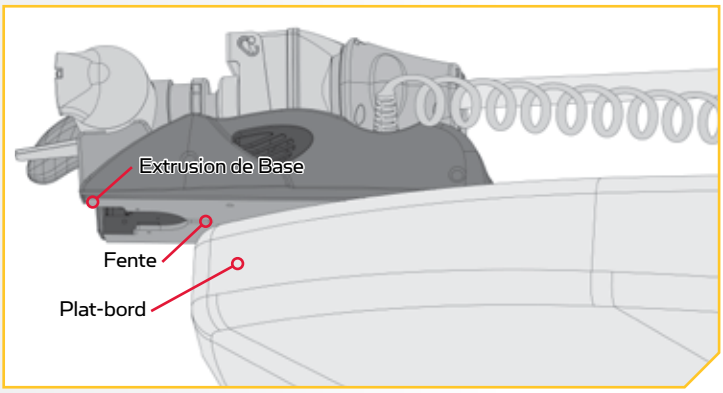

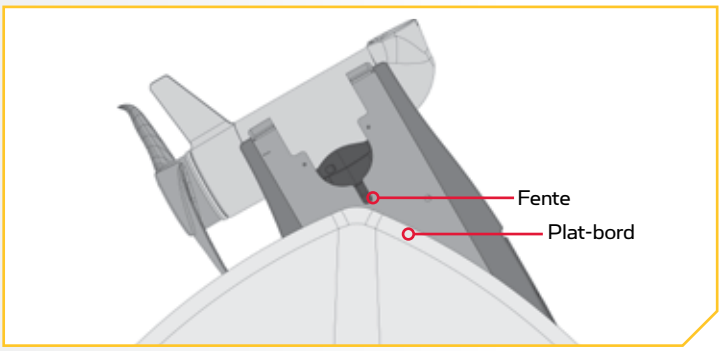

7

k. Il est recommandé de marquer au moins 4 des 6 trous dans l'extrusion de base et d'avoir au moins deux boulons de chaque côté qui sont le plus éloignés l'un de l'autre. Une installation idéale serait d'utiliser 6 boulons avec un minimum de 4.

l. Assurez-vous que la zone sous l'emplacement pour percer des trous et installer des rondelles et des écrous est dégagée. Percez les trous aux endroits marqués à l'aide d'une mèche de 9/32 po (7,14 mm).

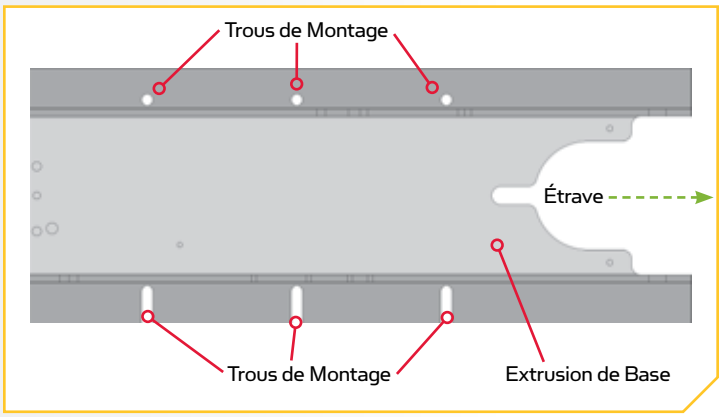

8

m. Montez le moteur sur le bateau à l'aide de la quincaillerie fournie. Placez d'abord la quincaillerie d'installation sur le côté du support où se trouve l'inclinaison motorisée. C'est sur le côté opposé de support, où la prolongation de l'amortisseur a été retirée. La base du support où se trouve l'inclinaison motorisée a des fentes de montage, et le côté où se trouve la prolongation de l'extension a des trous de montage.

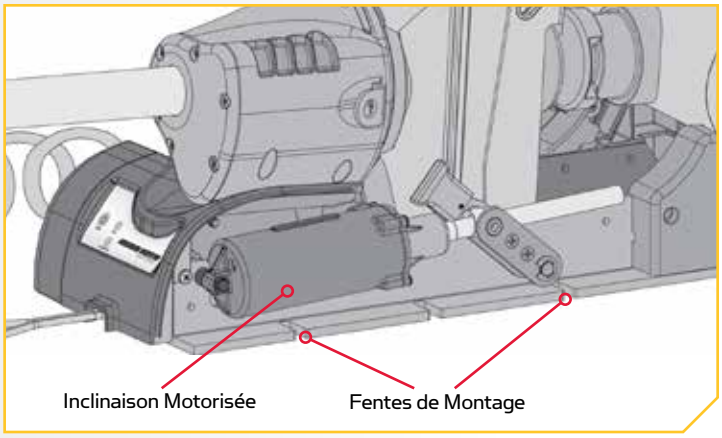

9

ARTICLE(S) REQUIS


#3 x 3


#6 x 3

#5 x 3


#7 x 3


#4 x 3

REMARQUE: Pour prévenir le grippage de la quincaillerie en acier inoxydable, n'utilisez pas d'outils haute vitesse pour l'installation. Le fait de mouiller les vis ou d'appliquer un antigrippant peut aider à prévenir qu'elles grippent.

n. **Si vous installez à l'aide d'un support à dégagement rapide,** installez le moteur avec les boulons à tête hexagonale (article nº 4) et les rondelles taillées (article nº 5). Orientez les rondelles taillées pour que le côté plat de la rondelle soit tourné vers l'extrusion de base. Le boulon devrait traverser la rondelle taillée et entrer dans le support à dégagement rapide. Laissez un espace d'au moins 1/4 po (6 mm) entre le boulon à tête hexagonale et la rondelle taillée, afin de glisser l'extrusion de base sous la rondelle taillée pour la placer.

REMARQUE: Les boulons longs, les rondelles plates et l'écrou Nylock ne sont pas utilisés lors de l'installation de l'Ulterra avec un support à dégagement rapide.

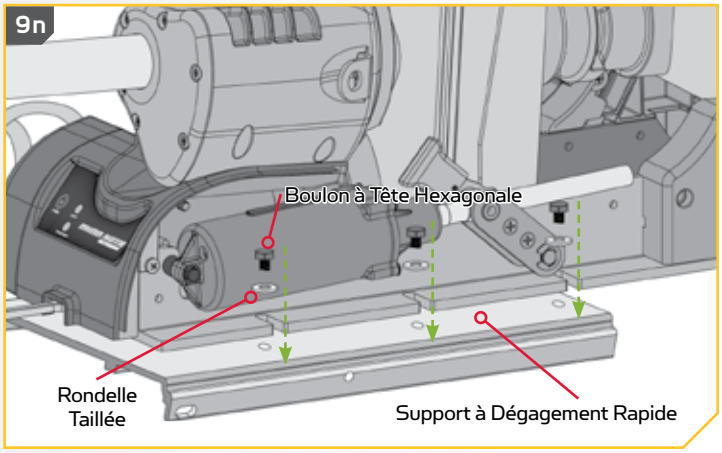

⚠ MISE EN GARDE

Faites preuve de vigilance pour éviter de pincer ou d'endommager les fils de capteur qui longent l'extrusion de base lors de l'installation et du serrage des boulons de montage du moteur.

10

o. Si l'installation est directement sur le pont du bateau, installez le moteur à l'aide des boulons longs (article nº 3), la rondelle taillée (article nº 5), la rondelle plate (article nº 6) et l'écrou Nylock (article nº 7). Orientez les rondelles taillées pour que le côté plat de la rondelle soit tourné vers l'extrusion de base. Le boulon devrait traverser la rondelle taillée, la rondelle en caoutchouc, ensuite le pont du bateau. Le boulon devrait d'abord être fixé en ajoutant la rondelle plate (article nº 6) au boulon et le fixant avec un écrou Nylock (article nº 7). Laissez un espace d'au moins 1/4 po (6 mm) entre le boulon à tête hexagonale, la rondelle taillée et le pont du bateau. Cela laissera suffisamment d'espace pour glisser l'extrusion de base entre la rondelle taillée et la rondelle en caoutchouc pour la placer.

REMARQUE: Les boulons courts ne sont pas utilisés lors de l'installation de l'Ulterra directement au bateau.

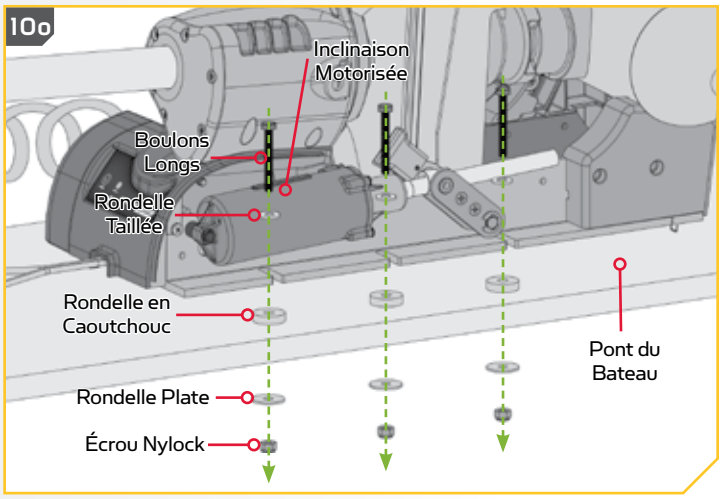

11

p. Faites glisser en place l'extrusion de base sous les boulons que vous venez d'installer.

q. Si vous installez à l'aide d'un support à dégagement rapide, l'extrusion de base devrait glisser entre le support à dégagement rapide et les rondelles taillées. Tenez les rondelles taillées sur le boulon à tête hexagonale afin que la rondelle taillée soit placée sur l'extrusion de base.

r. Si l'installation est directement sur le pont du bateau, l'extrusion de base devrait glisser entre la rondelle taillée et la rondelle en caoutchouc. Tenez les rondelles taillées sur le boulon long afin que la rondelle taillée soit placée sur l'extrusion de base.

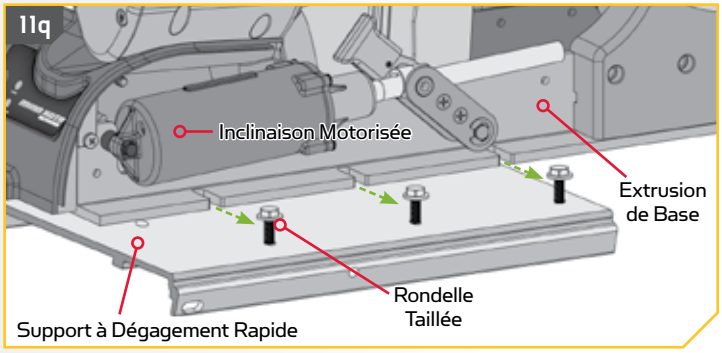

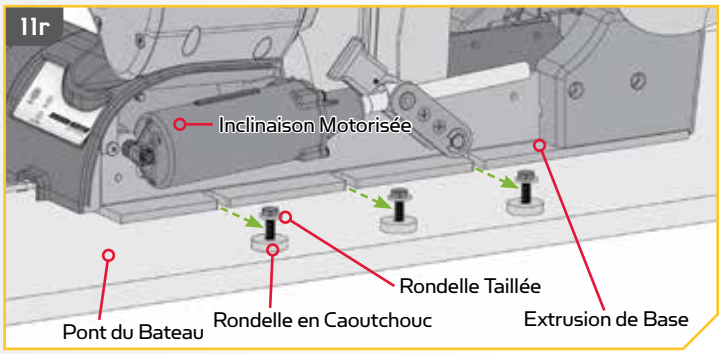

12

ARTICLE(S) REQUIS

#3 x 3 | #6 x 3 | #5 x 3 | #7 x 3 | #4 x 3

REMARQUE: Pour prévenir le grippage de la quincaillerie en acier inoxydable, n'utilisez pas d'outils haute vitesse pour l'installation. Le fait de mouiller les vis ou d'appliquer un antigrippant peut aider à prévenir qu'elles grippent.

s. Placez la quincaillerie dans les trous de montage sur le côté du support où se trouve l'amortisseur pour fixer l'extrusion de base.

t. Si vous installez à l'aide d'un support à dégagement rapide, installez le moteur avec les boulons à tête hexagonale (article nº 4) et les rondelles taillées (article nº 5). Orientez les rondelles taillées pour que le côté plat de la rondelle soit tourné vers l'extrusion de base. Le boulon devrait traverser la rondelle taillée et l'extrusion de base et entrer dans le support à dégagement rapide.

REMARQUE: Les boulons longs, les rondelles plates et l'écrou Nylock ne sont pas utilisés lors de l'installation de l'Ulterra avec un support à dégagement rapide.

u. Si l'installation est directement sur le pont du bateau, installez le moteur à l'aide des boulons longs (article nº 3), la rondelle taillée (article nº 5), la rondelle plate (article nº 6) et l'écrou Nylock (article nº 7). Orientez les rondelles taillées pour que le côté plat de la rondelle soit tourné vers l'extrusion de base. Le boulon devrait traverser la rondelle taillée, l'extrusion de base, la rondelle en caoutchouc et ensuite le pont du bateau. Le boulon devrait d'abord être fixé en ajoutant la rondelle plate (article nº 6) et en le fixant ensuite avec un écrou Nylock (article nº 7).

REMARQUE: Les boulons courts ne sont pas utilisés lors de l'installation de l'Ulterra directement au bateau.

⚠ MISE EN GARDE

Faites preuve de vigilance pour éviter de pincer ou d'endommager les fils de capteur qui longent l'extrusion de base lors de l'installation et du serrage des boulons de montage du moteur.

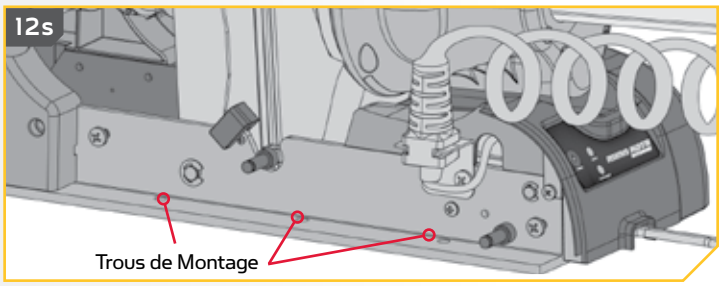

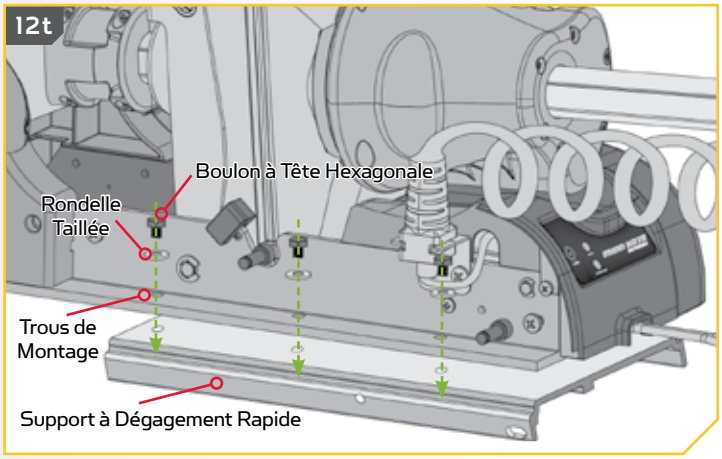

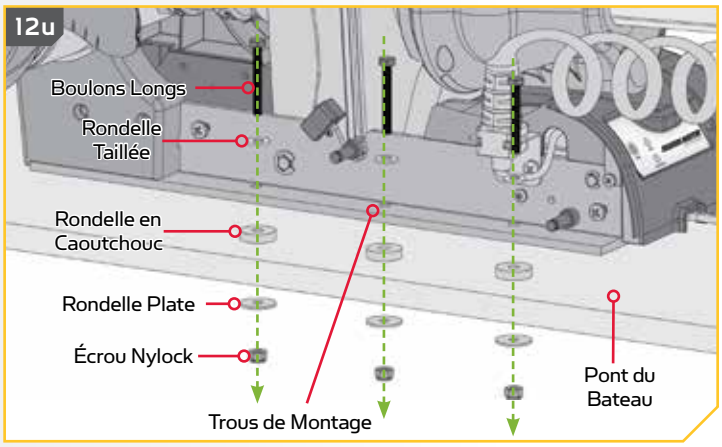

13

v. À ce stade du processus d'installation, le support devrait être fixé au pont du bateau; le moteur peut maintenant être rassemblé. La prolongation de l'amortisseur peut être glissée à sa place sur le moteur. Cela doit se faire de façon à ce que l'arbre de l'amortisseur pointe vers l'intérieur du bateau. Réinstallez les deux serre-câbles de 5/16 po (8 mm).

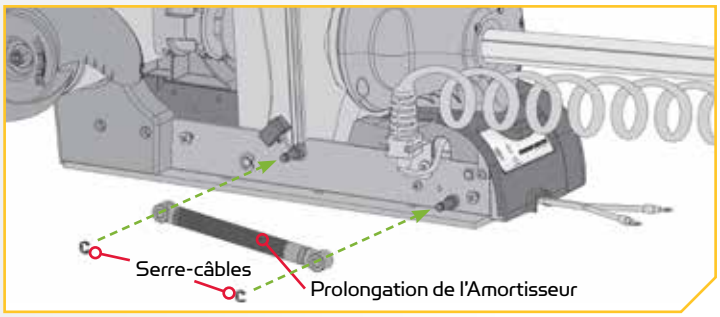

14

w. Replacez la plaque latérale droite.

x. Replacez la plaque latérale gauche.

y. Replacez les quatre vis de la plaque latérale en utilisant un tournevis cruciforme nº 2 ou nº 3.

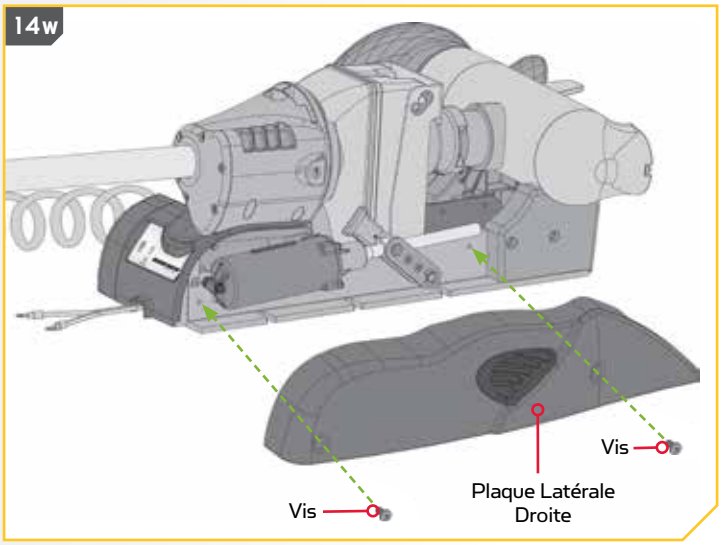

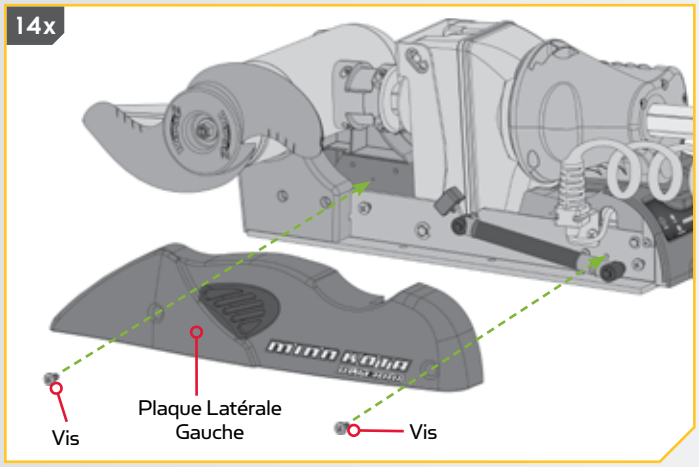

15

ARTICLE(S) REQUIS

#18 x 4

#EE x 1

z. Prenez la pédale (article nº EE) et retournez-la. Placez un coussinet de pédale (article nº 18) dans chacun des emplacements de coussinet.

REMARQUE: Les coussinets sont recommandés lors de l'utilisation de la pédale sur des surfaces n'étant pas couvertes de tapis.

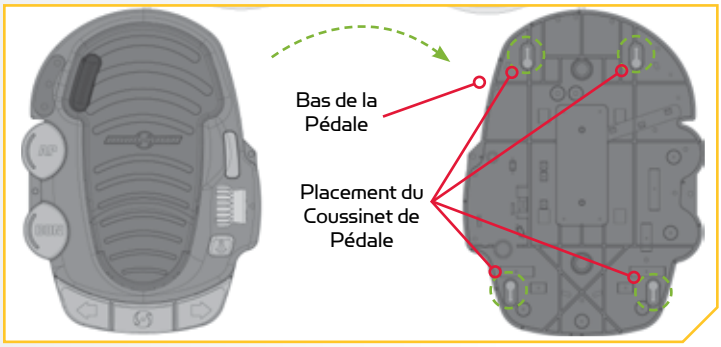

Acheminement des Câbles de l'Universal Sonar et i-Pilot Link

Un système de transducteur Universal Sonar peut être préinstallé sur votre moteur de pêche à la traîne. Le Universal Sonar est un transducteur sonar 2D, doté d'un capteur de température intégré dans le module inférieur du moteur de pêche à la traîne. Il se caractérise par une fréquence de fonctionnement de 83/200 kHz. La connexion de ce transducteur à un détecteur de poissons compatible* vous offre une vue sonar 2D de ce qui se passe directement sous votre moteur de pêche à la traîne. La conception intégrée protège le transducteur des risques subaquatiques et empêche les torsions et les dommages causés aux câbles du transducteur.

Dans certains cas, des bulles d'air peuvent adhérer à la surface du transducteur Universal Sonar et avoir une incidence sur le rendement. Si cela se produit, essuyez simplement la surface du transducteur à l'aide de votre doigt.

Tous les moteurs Universal Sonar sont équipés d'un fil de masse interne. Un mauvais raccordement risque de causer des interférences avec d'autres sonars et peut endommager votre moteur de pêche à la traîne, les composants électroniques ou les autres accessoires de votre bateau. Veuillez vous reporter aux sections sur l'Installation de la batterie et du câblage, câblage du moteur dans le présent manuel pour des directives sur le raccordement.

REMARQUE: l'Universal Sonar offre seulement les capacités d'un sonar 2D fonctionnant à 83/200 kHz. Il n'est pas adapté aux écrans à images qui nécessitent des fréquences plus élevées comme 455 kHz ou 800 kHz (« Down Imaging » (Vue sous le bateau), « Side Imaging » (Vue de chaque côté du bateau), etc.). Les modules spécifiques au « Down Imaging » (DI) ne sont pas compatibles avec l'Universal Sonar. Voir le tableau des compatibilités sur le site minnkotamotors.com pour obtenir une liste des détecteurs de poissons compatibles. *Nécessite un adaptateur, vendu séparément. Pour obtenir une liste à jour des détecteurs de poissons compatibles et pour connaître le câble adaptateur approprié, visitez minnkotamotors.com.

Un système de transducteur Universal Sonar peut être préinstallé sur votre moteur de pêche à la traîne. Pour connaître la compatibilité et obtenir de plus amples informations sur l'Universal Sonar, veuillez visiter le site minnkotamotors.com. Votre moteur de pêche à la traîne est peut-être déjà équipé soit du i-Pilot ou du i-Pilot Link. Pour en savoir plus sur les capacités du GPS offertes avec votre système de navigation i-Pilot ou i-Pilot Link, veuillez vous reporter au manuel du propriétaire correspondant en visitant minnkotamotors.com.

Les câbles de l'Universal Sonar ainsi que ceux du i-Pilot Link doivent être connectés à un dispositif de sortie pour que les fonctions. Ces connexions se trouvent sur le moteur de pêche à la traîne sous la tête de contrôle. Le système i-Pilot n'a pas besoin d'une connexion externe câblée. S'il n'y a qu'une connexion, c'est parce que votre moteur est équipé du système i-Pilot. Si une seule connexion est présente, c'est pour connecter l'Universal Sonar. Si deux câbles sont présents, un connecte l'Universal Sonar et l'autre connecte l'i-Pilot Link. Veuillez suivre les recommandations de Minn Kota sur l'acheminement des câbles afin d'optimiser et maximiser la fonctionnalité. L'acheminement sera le même, peu importe le nombre de câbles présents. Utilisez les directives suivantes pour effectuer correctement l'acheminement des câbles.

Les câbles de l'Universal Sonar sont blindés de sorte à réduire les interférences. Afin de protéger ce blindage, il est recommandé de ne pas serrer fermement les câbles contre des coins vifs ni des objets durs. Si des attaches de câble sont utilisées, évitez de trop serrer. Tout surplus de câble devrait être enlacé en une boucle lâche d'au moins 4 po (10 cm) de diamètre.

Afin de réduire les interférences causées par le moteur de pêche à la traîne, assurez-vous que le détecteur de poissons et le moteur de pêche à la traîne sont actionnés par des batteries indépendantes. Veuillez vous reporter aux sections sur l'Installation de la batterie et du câblage, câblage du moteur dans le présent manuel pour des directives sur le raccordement.

Afin de mieux identifier les câbles qui sortent de la tête de contrôle, consultez les diagrammes ci-dessous qui indiquent à quoi ressemblent les connecteurs de câble Universal Sonar et i-Pilot Link.

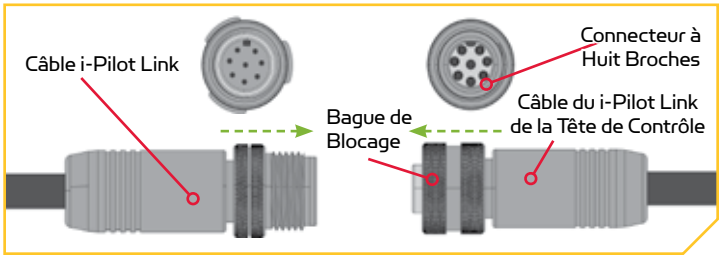

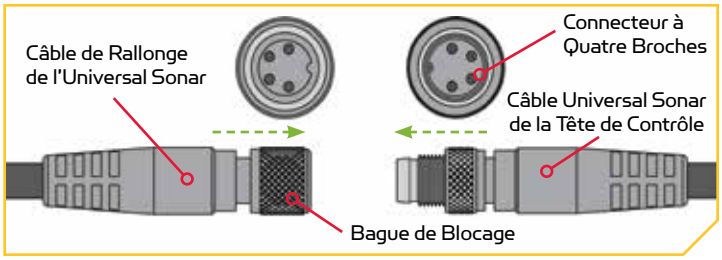

1

a. Placez le moteur dans la position déployée.

b. Trouvez la connexion des câbles de l'Universal Sonar ou du i-Pilot Link, si équipé, à la base de la tête de contrôle.

⚠ MISE EN GARDE

Le défaut de suivre l'acheminement des fils recommandé pour les câbles de l'Universal Sonar ou du i-Pilot Link, si équipé, peut causer des dommages au produit et annuler sa garantie. Acheminez les câbles en évitant les points de pincement et les autres zones qui pourraient faire en sorte que les câbles soient pliés à des angles aigus. Effectuer l'acheminement des câbles d'une tout autre façon que celle dictée peut entraîner des dommages aux câbles par un pincement ou sectionnement.

c. Le câble de l'Universal Sonar ou du i-Pilot Link doit être passé entièrement au travers du cordon enroulé. Il doit sortir du cordon enroulé au bas de ce dernier, où il se connecte au support.

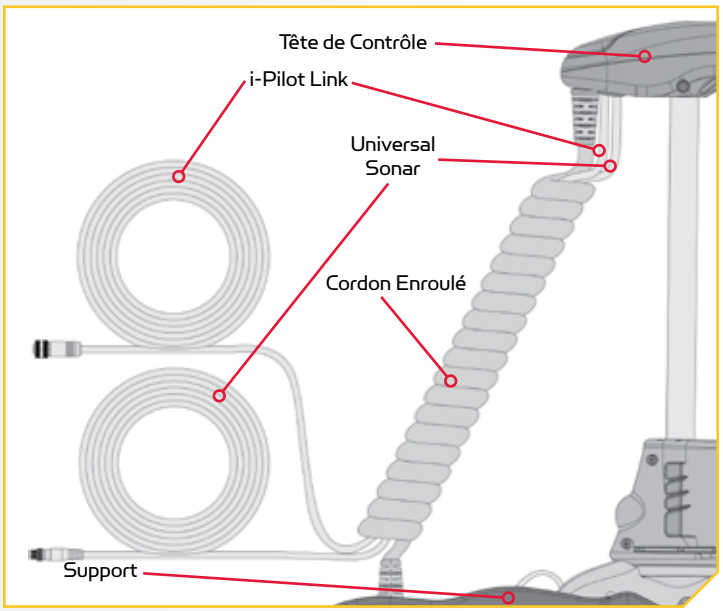

REMARQUE: Lorsque le câble de l'Universal Sonar ou du i-Pilot Link est sorti du cordon enroulé, il doit être acheminé par un système d'acheminement établi sur le bateau, dans une zone libre d'interférences. Inspectez bien le chemin planifié pour vous assurer qu'il n'y a pas d'arêtes vives, d'obstacles ou d'obstructions qui pourraient endommager les câbles.

Connexion d'une Rallonge d'Universal Sonar

Le câble de l'Universal Sonar pourrait ne pas être assez long pour atteindre le détecteur de poissons. Si la longueur du câble n'est pas suffisante pour atteindre l'emplacement désiré du détecteur de poissons, une rallonge d'une longueur de 14,5 pi (4,3 m) est offerte. Minn Kota recommande d'utiliser le MKR-US2-11.

1

a. Placez le moteur dans la position déployée.

b. Localisez l'Universal Sonar à la base du montage, le cas échéant.

c. Trouvez le connecteur à quatre broches de l'Universal Sonar à l'extrémité de la rallonge de l'Universal Sonar. Le connecteur est noir et est doté d'une bague de blocage filetée en acier inoxydable.

REMARQUE: Votre détecteur de poissons doit être éteint jusqu'à ce que cette procédure soit terminée.

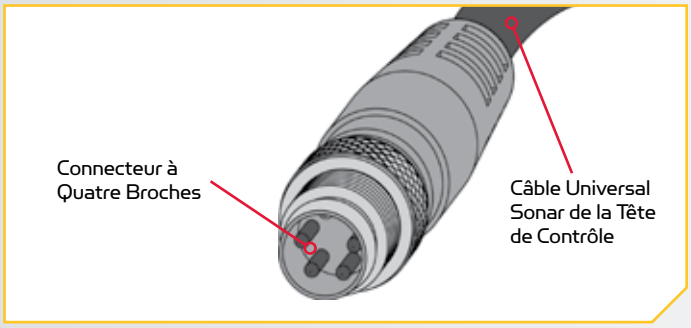

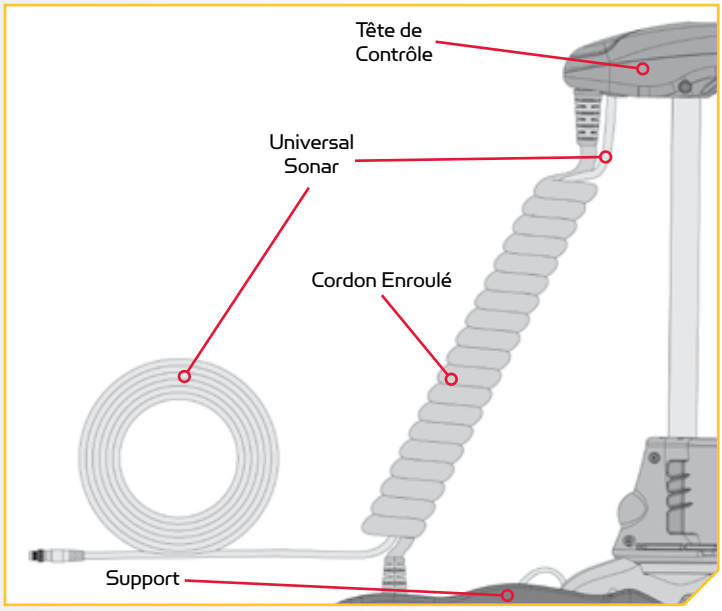

REMARQUE: Si la longueur du câble n'est pas suffisante pour atteindre l'emplacement désiré du détecteur de poissons, une rallonge d'une longueur de 14,5 pi (4,3 m) est offerte (MKR-US2-11) (vendue séparément).

2

d. Alignez les broches de la fiche du connecteur de l'Universal Sonar de la tête de contrôle à la douille correspondante de la rallonge de l'Universal Sonar à votre détecteur de poissons. Poussez fermement la fiche du connecteur dans la douille de la connexion de l'Universal Sonar. Tournez la bague de blocage jusqu'à ce qu'elle soit bien serrée.

e. Branchez l'autre extrémité de la fiche de votre adaptateur à votre détecteur de poissons en suivant les instructions du fabricant.

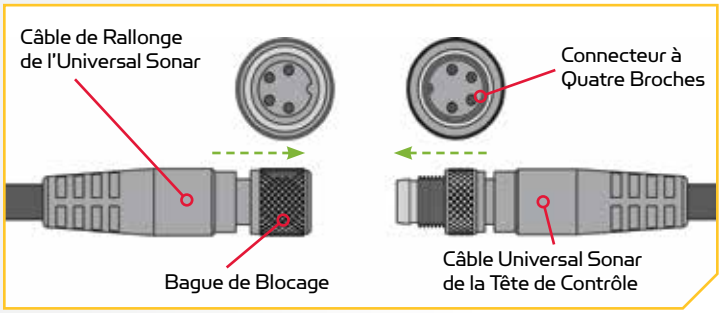

REMARQUE: Les connecteurs sont codés pour empêcher une installation en sens inverse.

Installation de l'Hélice

1

ARTICLE(S) REQUIS

#21 x 1 | #19 x 1 | #20 x 1 | #18 x 1

⚠ MISE EN GARDE

Débranchez le moteur de la batterie avant d'effectuer tout travail ou entretien sur l'hélice.

a. Prenez l'ergot d'entraînement (Article n° 18) et glissez-le dans l'orifice de l'arbre d'armature. Placez l'ergot d'entraînement à l'horizontale en saisissant l'arbre d'armature et en le tournant avec l'ergot d'entraînement en place.

b. Alignez l'hélice (Article n° 21) de manière à ce qu'elle soit à l'horizontale et parallèle à l'ergot d'entraînement. Glissez l'hélice sur l'arbre d'armature et l'ergot d'entraînement jusqu'à ce qu'elle repose contre l'appareil inférieur.

c. Installez la rondelle de l'hélice (Article n° 19) et l'écrou de l'hélice (Article n° 20) sur l'extrémité de l'arbre d'armature.

d. En tenant l'extrémité de l'arbre d'armature avec un tournevis à lame plate, serrez l'écrou de l'hélice avec une clé plate 9/16 po (14,29 cm).

e. Serrez l'écrou d'hélice 1/4 de tour passé le serrage confortable à 25-35 po lb (2,8-4 Nm).

⚠ MISE EN GARDE

Ne pas trop serrer pour ne pas endommager l'hélice.

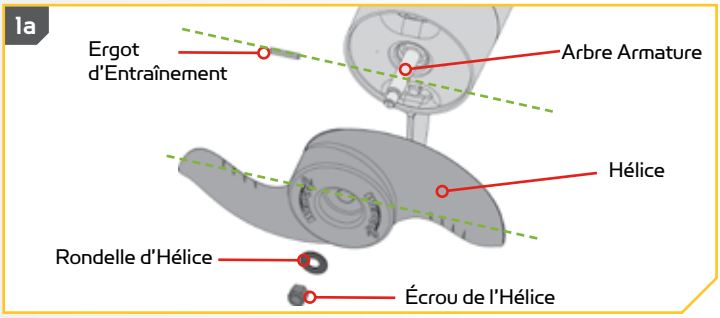

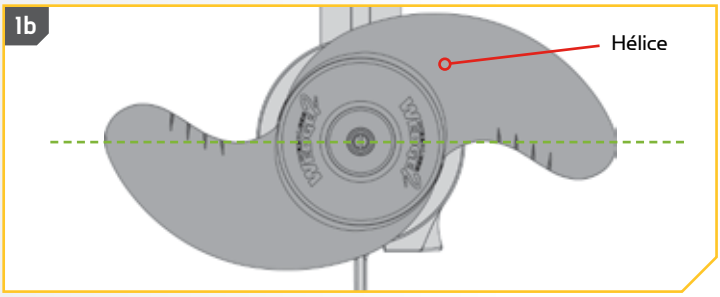

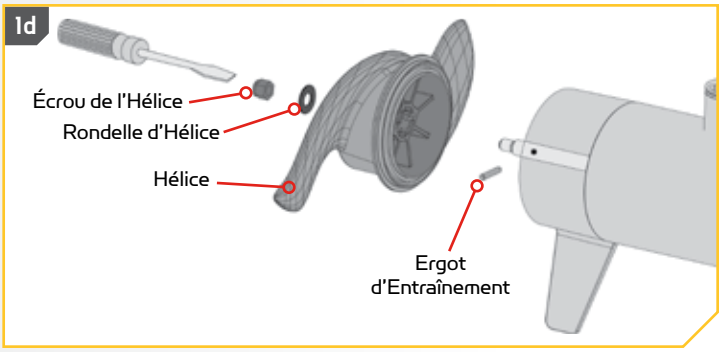

Arrimage et Déploiement du Moteur avec la Pédale

Exécutez la procédure suivante lorsque vous désirez arrimer et déployer le moteur. N'oubliez pas que si votre moteur se bloque à 45 degrés lorsque vous tentez de l'arrimer, il est probable que les batteries soient trop faibles pour arrimer complètement le moteur. Dans un tel cas, réinitialisez l'alimentation, déployez le moteur, arrimez le moteur à son réglage le plus élevé et coupez l'alimentation jusqu'à ce que les batteries puissent être à nouveau. Lorsque les batteries sont chargées, tentez à nouveau d'arrimer le moteur.

1

a. Repérez le panneau indicateur à la base du support.

b. Assurez-vous que le moteur est sous tension en confirmant que la DEL verte à côté du voyant de système prêt est allumée.

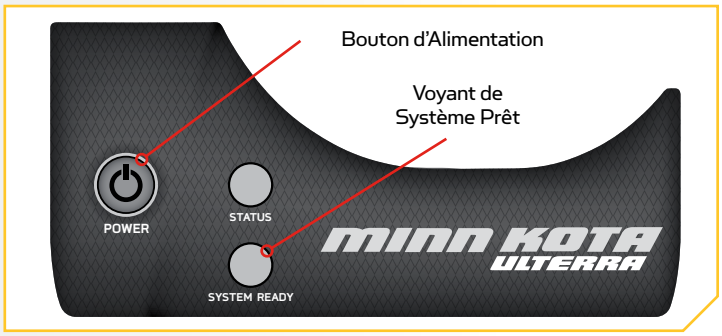

2

c. Appuyez sur le bouton Mode de la pédale jusqu'à ce que la DEL jaune ambre au centre du panneau indicateur de la pédale soit allumée. La pédale passe alors en mode Ulterra.

REMARQUE: Le mode Ulterra doit être activé pour pouvoir arrimer et déployer le moteur.

d. Pour déployer le moteur lorsqu'il est arrimé, appuyez deux fois sur le bouton Arrimer/déployer. Pour arrimer le moteur lorsqu'il est déployé, appuyez une fois sur le bouton Arrimer/déployer.

⚠ AVERTISSEMENT

Faites attention de garder vos doigts loin des charnières, des points de pivot et des pièces mobiles lorsque vous arrimez et déployez le moteur. Lorsque vous arrimez et déployez le moteur, assurez-vous qu'il ne touche pas le bateau, la remorque ou toute autre obstruction.

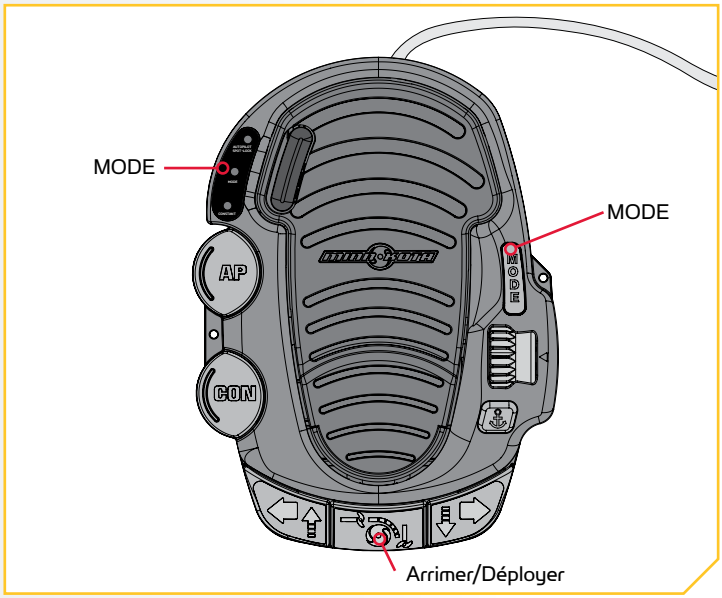

REMARQUE: La séquence de déploiement peut être interrompue en tout temps en appuyant sur le bouton Arrimer/déployer. La séquence d'arrimage peut être interrompue en tout temps en appuyant sur le bouton de compensation ou le bouton Arrimer/déployer.

Déploiement du Moteur avec i-Pilot

1

a. Appuyez sur le bouton Accueil.

b. Utilisez la flèche vers le haut et la flèche vers le bas pour trouver le menu Déployer (Deploy) au bas de l'écran.

REMARQUE: Le menu Déployer (Deploy) au bas de l'écran n'est disponible que lorsque le moteur est arrimé.

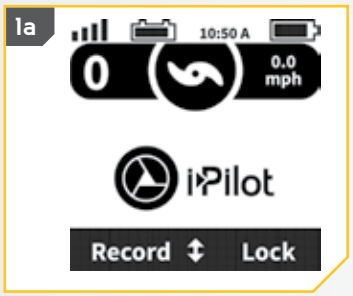

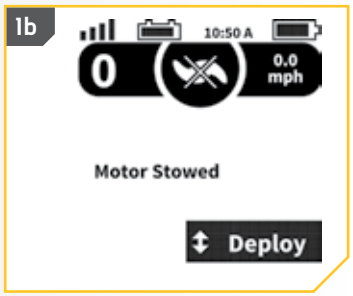

2

c. Appuyez deux fois sur la touche de fonction droite pour sélectionner le menu Déployer (Deploy). Après la sélection, le moteur se déploiera automatiquement.

AVERTISSEMENT

Dès que le menu Déployer (Deploy) est sélectionné, le moteur se déploiera automatiquement. Assurez-vous que le moteur peut se déplacer librement. L'hélice est désactivée lorsque le moteur est arrimé et pendant le déploiement, afin de prévenir un contact accidentel avec une hélice en mouvement.

d. On peut arrêter le déploiement du moteur tandis qu'il est en cours. Utilisez soit la touche de fonction gauche pour sélectionner le menu Arrimer (Stow), soit la touche de fonction droite pour sélectionner le menu Pause.

e. Si le moteur continue, il terminera le processus de déploiement et fonctionnera ensuite normalement.

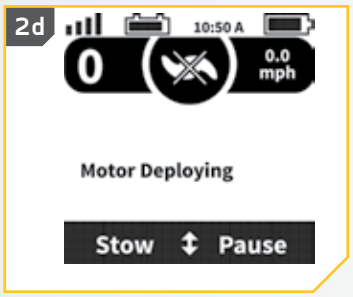

Arrimage du Moteur avec i-Pilot

1

a. Appuyez sur le bouton Accueil.

b. Utilisez la flèche vers le haut et la flèche vers le bas pour trouver le menu Arrimer (Stow) au bas de l'écran.

REMARQUE: Le menu Arrimer (Stow) au bas de l'écran n'est disponible que lorsque le moteur est déployé.

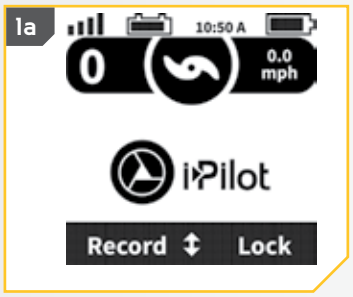

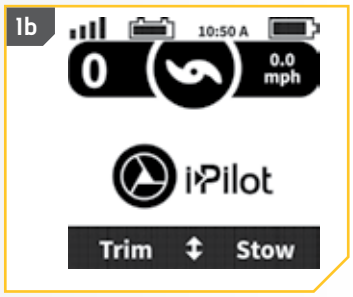

2

c. Utilisez la touche de fonction droite pour accéder au menu Arrimer (Stow). Après la sélection, le moteur s'arrimera automatiquement.

AVERTISSEMENT

Dès que le menu Arrimer (Stow) est sélectionné, le moteur s'arrimera automatiquement. Assurez-vous que le moteur peut se déplacer librement. L'hélice est désactivée pendant l'arrimage, afin de prévenir un contact accidentel avec une hélice en mouvement.

d. On peut arrêter l'arrimage du moteur tandis qu'il est en cours. Utilisez soit la touche de fonction gauche pour sélectionner le menu Déployer (Deploy), soit la touche de fonction droite pour sélectionner le menu Pause.

e. Si le moteur continue, il terminera le processus d'arrimage, et l'hélice sera désactivée.

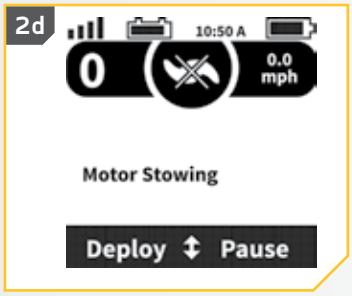

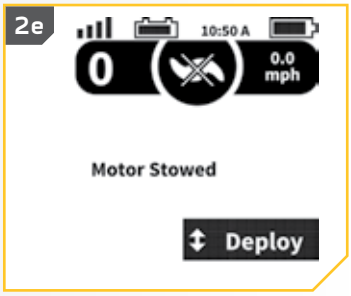

Déploiement du Moteur avec i-Pilot Link

1

a. Appuyez sur le bouton Accueil (Home).

b. Faites défiler la zone de contenu avec le doigt ou le bouton de navigation de l'écran pour trouver le bouton Ulterra.

c. Sélectionnez le bouton Ulterra avec le doigt ou en appuyant sur le bouton OK pour ouvrir le menu Ulterra.

REMARQUE: Le bouton Ulterra se trouve seulement dans la zone de contenu à l'aide des boutons Accueil (Home) Contrôle (Control) sur les systèmes i-Pilot Link sur un moteur Ulterra. Certains boutons d'écran d'accueil peuvent être verrouillés lors de l'arrimage du bateau, parce que ces fonctions nécessitent que le moteur soit déployé pour fonctionner.

2

d. Lorsque vous êtes au Menu Ulterra, trouvez le bouton Déployer (Deploy) et sélectionnez-le. L e bouton Déployer (Deploy) doit être poussé deux fois pour activer.

AVERTISSEMENT

Dès que le bouton Déployer (Deploy) est sélectionné, le moteur se déploiera automatiquement. Assurez-vous que le moteur peut se déplacer librement. L'hélice est désactivée lorsque le moteur est arrimé et pendant le déploiement, afin de prévenir un contact accidentel avec une hélice en mouvement.

e. Le moteur Ulterra déploiera. On peut arrêter le déploiement du moteur tandis qu'il est en cours. Pour arrêter l'action, trouvez le bouton Pause et sélectionnez-le.

f. Pour repartir l'action de déploiement, sélectionnez le bouton Déployer (Deploy).

g. Si le moteur continue, il terminera le processus de déploiement et fonctionnera ensuite normalement.

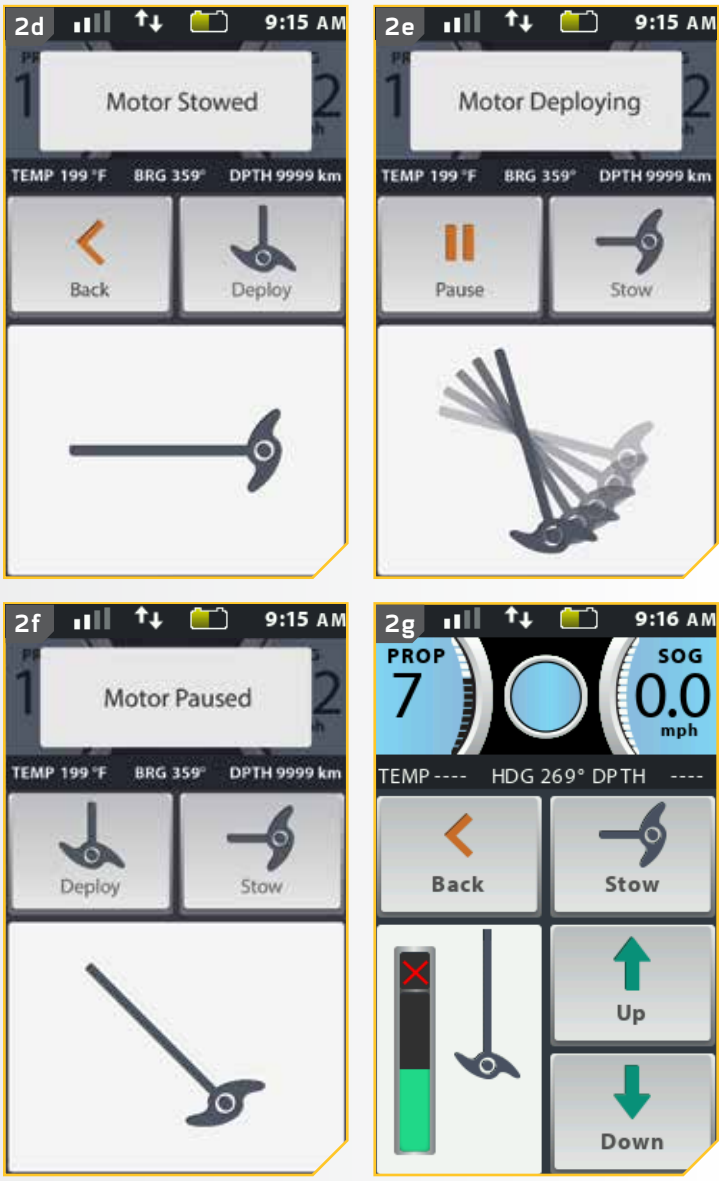

Arrimage du Moteur avec i-Pilot Link

1

a. Appuyez sur le bouton Accueil (Home).

b. Faites défiler la zone de contenu avec le doigt ou le bouton de navigation de l'écran pour trouver le bouton Ulterra.

c. Sélectionnez le bouton Ulterra avec le doigt ou en appuyant sur le bouton OK pour ouvrir le menu Ulterra.

REMARQUE: le bouton Ulterra se trouve seulement dans la zone de contenu à l'aide des boutons Accueil (Home) et Contrôle (Control) sur les systèmes i-Pilot Link sur un moteur Ulterra. Le moteur peut seulement être arrimé lorsqu'il est déployé.

2

d. Lorsque vous êtes au Menu Ulterra, trouvez le bouton Arrimage (Stow) et sélectionnez-le.

REMARQUE: Le bouton Arrimage (Stow) se trouve seulement lorsque le moteur est déployé.

AVERTISSEMENT

Dès que le bouton Arrimage (Stow) est sélectionné, le moteur s'arrimera automatiquement. Assurez-vous que le moteur peut se déplacer librement. L'hélice est désactivée pendant l'arrimage, afin de prévenir un contact accidentel avec une hélice en mouvement.

e. Le moteur Ulterra s'arrimera. On peut arrêter l'arrimage du moteur tandis qu'il est en cours. Pour arrêter l'action, trouvez le bouton Pause et sélectionnez-le.

INSTALLATION DES BATTERIES ET DU CÂBLAGE

GRÉEMENT DE L'EMBARCATION ET INSTALLATION DU PRODUIT

Pour des raisons de sécurité et de conformité, nous vous recommandons de suivre les normes du conseil américain sur les embarcations et les yachts (ABYC) pour le gréement de l'embarcation. Les altérations dans le câblage de l'embarcation devraient être complétées par un technicien de marine qualifié. Les spécifications suivantes sont seulement des lignes directrices générales:

⚠ MISE EN GARDE

Ces lignes directrices s'appliquent au gréement général pour soutenir le moteur de Minn Kota. L'alimentation de multiples moteurs ou d'autres appareils électriques, à partir du même circuit d'alimentation, peut influer sur le gabarit de conducteurs et le dimensionnement des disjoncteurs recommandé. Pour un fil plus long que celui fourni avec l'appareil, suivre le tableau de dimensionnement de gabarit des conducteurs et des disjoncteurs du tableau ci-dessous. Si la longueur totale de la rallonge est de plus de 25 pi (7,60 m), nous vous recommandons de communiquer avec un technicien maritime qualifié.

⚠ MISE EN GARDE

Un dispositif de protection contre la surintensité (disjoncteur ou fusible) doit être utilisé. Les préalables de la garde côtière exigent que chaque conducteur de courant, qui n'est pas fixé, soit protégé par un fusible ou un disjoncteur qui se réinitialise manuellement et qui ne peut se déclencher automatiquement. Le dimensionnement du type (courant et tension de puissance nominale) de fusible ou de disjoncteur doit être choisi en fonction du propulseur électrique utilisé. Le tableau ci-dessous donne les lignes directrices recommandées pour ce qui est du dimensionnement des disjoncteurs.

TABLEAU DES DIMENSIONS DE GABARIT DES CONDUCTEURS ET DISJONCTEURS

Le présent tableau des dimensions de gabarit des conducteurs et disjoncteurs est uniquement valable pour les hypothèses suivantes:

1. Il n'y a pas plus de 2 conducteurs qui sont regroupés à l'intérieur d'une gaine ou d'un conduit à l'extérieur de l'espace moteur.
2. Chaque conducteur est muni d'un isolant d'une température nominale de 105 °C.
3. Aucune chute de tension de plus de 5 % n'est autorisée lorsque le moteur est à plein régime, en fonction des exigences en matière d'alimentation du produit qui ont été publiées.

Modèle/ Poussée du Moteur	Courant Tiré Max	Disjoncteur	Longueur de la Rallonge				
			1.5 mètres	3 mètres	4.5 mètres	6 mètres	7.5 mètres
30 lb.	30	50 Amp @ 12 VDC	6 mm²	6 mm²	10 mm²	16 mm²	25 mm²
40 lb., 45 lb.	42		6 mm²	10 mm²	16 mm²	25 mm²	25 mm²
50 lb., 55 lb.	50	60 Amp @ 12 VDC	10 mm²	16 mm²	25 mm²	25 mm²	35 mm²
70 lb.	42	50 Amp @ 24 VDC	6 mm²	6 mm²	10 mm²	10 mm²	16 mm²
80 lb.	56	60 Amp @ 24 VDC	10 mm²	10 mm²	10 mm²	16 mm²	16 mm²
101 lb.	46	50 Amp @ 36 VDC	10 mm²	10 mm²	10 mm²	10 mm²	10 mm²
Engine Mount 101	50	60 Amp @ 36 VDC	10 mm²	16 mm²	25 mm²	25 mm²	35 mm²
112 lb.	52	60 Amp @ 36 VDC	10 mm²	10 mm²	10 mm²	10 mm²	10 mm²
Engine Mount 160	116	(2) x 60 Amp @ 24 VDC	35 mm²	35 mm²	35 mm²	35 mm²	35 mm²
E-Drive	40	50 Amp @ 48 VDC	6 mm²	6 mm²	6 mm²	6 mm²	6 mm²

*La longueur de la rallonge fait référence à la distance séparant les batteries des fils du propulseur électrique.

Référence

Le code des règlements fédéraux des États-Unis : article 183 du titre 33 du CFR - Embarcations et équipements associés ABYC E-11 : systèmes électriques CA et CC sur les embarcations.

SÉLECTIONNER UNE BATTERIE ADÉQUATE

Le moteur fonctionnera avec toute batterie marine plomb/acide à décharge profonde de 12 volts. Pour un meilleur résultat, utiliser une batterie marine à décharge profonde avec ampérage nominal d'au moins 105 ampères/heure. Selon une estimation générale effectuée sur l'eau, votre moteur de 12 volts utilisera un ampère par heure et votre moteur de 24 volts, 0,75 ampère par heure, pour chaque coup de poussée produite lorsque le moteur tourne à plein régime. L'ampérage réel utilisé est en fonction des conditions environnementales spécifiques et des exigences de fonctionnement. Maintenir la batterie complètement chargée. Un entretien adéquat fera en sorte que le courant sera disponible le moment venu et améliorer considérablement la durée de vie de la batterie. Le fait de ne pas recharger les batteries au plomb (dans les 12 à 24 heures) est la principale cause de défaillance prématurée de celles-ci. Utiliser un chargeur à taux variable afin d'éviter une surcharge. Nous offrons une vaste sélection de chargeurs en fonction de vos besoins. Si vous utilisez une batterie à manivelle pour démarrer un moteur hors-bord à essence, nous vous recommandons d'utiliser des batteries marines à décharge profonde séparées pour votre propulseur électrique Minn Kota.

⚠ AVERTISSEMENT

Ne jamais brancher les bornes (+) et (–) de la batterie ensemble. S'assurer qu'aucun objet métallique ne puisse tomber sur la batterie et provoquer un court-circuit aux bornes. Cela provoquerait immédiatement un court-circuit et un risque extrême d'incendie.

⚠ MISE EN GARDE

Consultez le "Tableau des dimensions de gabarit des conducteurs et disjoncteurs" dans la section précédente pour trouver le disjoncteur ou fusible approprié convenant à votre moteur. Pour les moteurs nécessitant un disjoncteur de 60 A, le disjoncteur Minn Kota MKR-19 60 A est recommandé.

⚠ MISE EN GARDE

Veuillez lire les renseignements suivants avant de connecter votre moteur à vos batteries afin d'éviter d'endommager votre moteur ou d'annuler votre garantie.

AUTRES POINTS À CONSIDÉRER

Utilisation de Chargeurs à C.C. ou Alternateurs

Votre moteur de pêche à la traîne Minn Kota peut être conçu avec un fil de masse interne pour réduire les interférences avec d'autres sonars. La plupart des systèmes de charge alternateurs ne tiennent pas compte de ce fil de masse et connectent les bornes négatives des batteries du moteur de pêche à la traîne aux bornes négatives de la batterie à manivelle/de démarrage. Ces connexions externes peuvent endommager les composants électroniques connectés ou le système électrique de votre moteur de pêche à la traîne et ainsi annuler votre garantie. Passez attentivement en revue le manuel de votre chargeur ou consultez son fabricant afin de vous assurer que votre chargeur est compatible avant de l'utiliser.

Minn Kota recommande l'utilisation de chargeurs de marque Minn Kota pour recharger les batteries connectées à votre propulseur électrique Minn Kota, étant donné qu'ils ont été conçus de sorte à fonctionner avec les moteurs dotés d'un fil de masse.

Accessoires Supplémentaires Connectés aux Batteries du Propulseur Électrique

Votre moteur Minn Kota, les composants électroniques de votre bateau ou votre bateau peuvent subir des dommages importants si de mauvaises connexions ont été effectuées entre les batteries de votre propulseur électrique et un autre système de batterie. Minn Kota recommande d'utiliser un système de batterie exclusif pour votre propulseur électrique. Lorsque possible, les accessoires doivent être branchés sur un système de batterie séparé. Les radios et les sonars ne doivent être connectés à aucune batterie du propulseur électrique étant donné que les interférences provenant du propulseur électrique sont inévitables. Lorsque vous connectez un accessoire supplémentaire à l'une des batteries du propulseur électrique, ou lorsque vous effectuez des connexions entre les batteries du propulseur électrique et d'autres systèmes de batterie sur le bateau, assurez-vous de respecter attentivement les indications ci-dessous.

La connexion négative (-) doit être connectée à la borne négative de la même batterie à laquelle la borne négative du propulseur électrique est connectée. Sur le tableau, cette batterie est appelée batterie « côté inférieur ». La connexion à une autre batterie du propulseur électrique fera entrer une tension positive dans la « mise à la terre » de cet accessoire, pouvant causer une corrosion excessive. Tout dommage causé par de mauvaises connexions entre les systèmes de batterie ne sera pas couvert par la garantie.

Systèmes de Démarrage d'Appoint et Commutateurs

Les systèmes de démarrage d'appoint et les commutateurs relient les bornes négatives des batteries connectées entre elles. La connexion de ces systèmes à la batterie "Côté Supérieur" ou à la batterie "Milieu" risque de causer d'importants dommages à votre propulseur électrique ou aux composants électroniques. La seule batterie du propulseur électrique qui peut être connectée de façon sécuritaire à un de ces systèmes est la batterie "Côté inférieur".

REMARQUE: Le fil de masse interne est doté d'un fusible de 3 A. Les mauvaises connexions décrites ci-dessus avec une intensité supérieure à 3 A feront sauter ce fusible et aucun autre dommage ne sera exposé. Si cela se produit, les interférences RF du propulseur électrique affectant les sonars et les autres composants électroniques seront plus significatives. Si le fusible saute, il faut trouver le mauvais raccordement et le résoudre avant de remplacer le fusible. Le fusible de rechange devrait être d'un courant de 3 A ou moins. Un fusible intact ne signifie pas un raccordement adéquat; d'importants dommages peuvent être causés par un câblage incorrect sans pour autant que le courant n'approche 3 A.

CONNEXION DES BATTERIES EN SÉRIE (SI REQUIS POUR VOTRE MOTEUR)

Systèmes de 24 Volts

Deux batteries de 12 volts sont nécessaires. Les batteries doivent être branchées en série, uniquement tel qu'illustré dans le schéma de câblage, afin de fournir 24 volts.

1. Assurez-vous que le moteur est éteint (sélecteur de vitesse sur "0").
2. Branchez un câble de raccordement à la borne positive (+) de la batterie 1 et à la borne négative (-) de la batterie 2.
3. Branchez le fil rouge positif (+) à la borne positive (+) sur la batterie 2.
4. Branchez le fil noir négatif (-) à la borne négative (-) de la batterie 1.

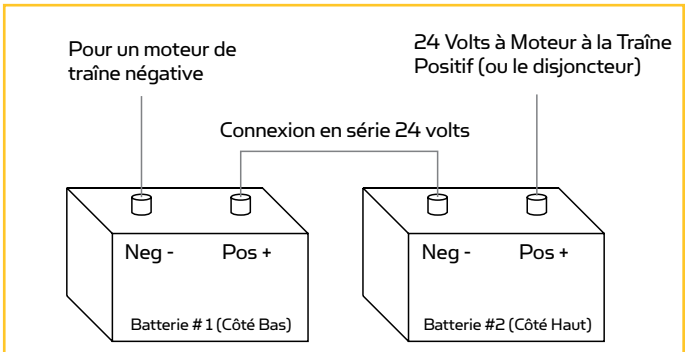

Deux batteries 12 volts connectées en série pour 24 volts

AVERTISSEMENT

Pour des raisons de sécurité, ne pas allumer le moteur jusqu'à ce que l'hélice soit dans l'eau. Si vous installez un raccordement en fil de plomb, respectez les polarités appropriées et suivez les instructions qui se trouvent dans votre manuel du propriétaire du bateau.

AVERTISSEMENT

- Pour des raisons de sécurité, débranchez le moteur des batteries lorsque le moteur n'est pas utilisé ou pendant la charge.
- Une mauvaise installation du câblage des systèmes de 24/36 volts pourrait provoquer une explosion des batteries.
- Gardez le serrage des écrous de papillon de raccordement solide et bien serré autour des bornes de la batterie.
- Installez la batterie dans un compartiment ventilé.

Systèmes de 36 Volts

Trois batteries de 12 volts sont nécessaires. Les batteries doivent être branchées en série, uniquement tel qu'illustré dans le schéma de câblage, afin de fournir 36 volts.

1. Assurez-vous que le moteur est éteint (sélecteur de vitesse sur "O").
2. Branchez un câble de raccordement à la borne positive (+) de la batterie 1 et à la borne négative (-) de la batterie 2. Branchez autre câble de raccordement à la borne positive (+) de la batterie 2 et à la borne négative (-) de la batterie 3.
3. Branchez le fil rouge positif (+) à la borne positive (+) sur la batterie 3.
4. Branchez le fil noir négatif (-) à la borne négative (-) de la batterie 1.

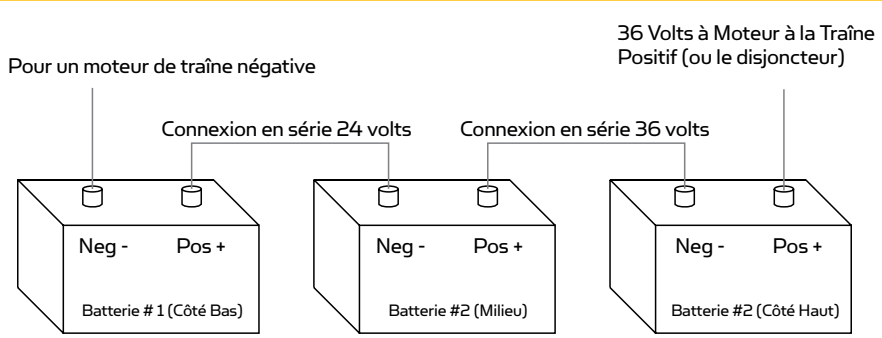

Trois batteries 12 volts connectées en série pour 36 volts

AVERTISSEMENT

Pour des raisons de sécurité, ne pas allumer le moteur jusqu'à ce que l'hélice soit dans l'eau. Si vous installez un raccordement en fil de plomb, respectez les polarités appropriées et suivez les instructions qui se trouvent dans votre manuel du propriétaire du bateau.

AVERTISSEMENT

- Pour des raisons de sécurité, débranchez le moteur des batteries lorsque le moteur n'est pas utilisé ou pendant la charge.
- Une mauvaise installation du câblage des systèmes de 24/36 volts pourrait provoquer une explosion des batteries.
- Gardez le serrage des écrous de papillon de raccordement solide et bien serré autour des bornes de la batterie.
- Installez la batterie dans un compartiment ventilé.

L'installation de votre Ulterra est terminée. Un manuel complet du propriétaire peut être téléchargé à minnkotamotors.com.

REMARQUES

ACCESSOIRES RECOMMANDÉS

CHARGEURS DE BATTERIE EMBARQUÉS ET PORTATIFS

Ne plus acheter de nouvelles batteries et commencer à prendre soin de celles déjà en votre possession. Plusieurs chargeurs peuvent en fait endommager les batteries à la longue, pouvant entraîner une autonomie réduite et une durée de vie plus courte. Les chargeurs Minn Kota à commande numérique assurent une charge rapide pour une protection et une durée de vie prolongée.

MK212PC

MK210D

MK110P

ANCRE POUR EAUX PEU PROFONDES TALON

Les ancres Talon se déploient rapidement, ont une force de retenue plus élevée et sont plus silencieuses que tout autre ancre pour eaux peu profondes. Offerts en profondeurs allant jusqu'à 12 pi (3,66 m) et en options de couleurs vives, elles comportent plusieurs fonctionnalités et innovations uniques dans le domaine:

- Déploiement Vertical en Plusieurs Étapes
- Modes D'ancrage Pouvant être Sélectionnés par L'utilisateur
- 2x la Force d'ancrage
- Déploiement Rapide
- Descente/Montée Automatique
- Triple Protection Contre les Débris
- Amortisseur Automatique de Vague Intégré
- Dissipation de Bruit
- Réglages Polyvalents

ACCESSOIRES MINN KOTA

Nous offrons un large éventail d'accessoires pour les propulseurs électriques, y compris:

- Un Disjoncteur de 60 A
- Des Supports de Montage
- Des Ensembles Stabilisateur
- Des Rallonges de Poignée
- Des connecteurs de batterie
- Bacs à Batterie
- Des fiches de connexion rapide

Pour la liste complète des accessoires Minn Kota, veuillez visiter le site Web minnkotamotors.com

Suivez-nous:

minnkotamotors.com

Minn Kota Consumer & Technical Service
Johnson Outdoors Marine Electronics, Inc.
PO Box 8129
Mankato, MN 56001

121 Power Drive
Mankato, MN 56001
Phone (800) 227-6433
Fax (800) 527-4464

Part #2207113 ECN 38208 Rev D 08/17

ULTERRA TRIM/STOW RESET PROCEDURES

In the unlikely event Ulterra will not trim or stow, the following procedure will reset the motor and restore functionailty:

1. Press and hold the POWER button located at the mounting base to turn power off (green LED light will turn off).
2. Press the POWER button until the green LED light illuminates.
3. Wait 3 seconds.
4. Press the POWER button 3 times within a 2 second period.

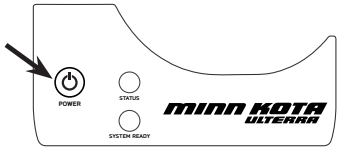

5. Red and green LED lights will flash continuously and the Ulterra will go through the following automated sequence:
    - Motor will position itself into the proper orientation
    - Motor will automatically trim up to the mounting base and trim down approximately 6 inches.
    - The flashing red LED light will turn off, and the flashing green LED light will become solid green.

Ulterra should now be reset and fully functional. If Ulterra does not reset, repeat the procedure. If the second attempt fails, please contact your local authorized service center or call Minn Kota service at (800) 227-6433.

NOTE: If the lower unit of the motor is trimmed within 6 inches of the mounting base and the boat hull is obstructing the motor's turning radius, manually turn the head of the motor so that the lower unit is perpendicular to the motor ramps prior to beginning this procedure.

STOWING FROM THE ULTERRA MOTOR

In the unlikely event your i-Pilot or i-Pilot Link remote becomes non-functioning, you can stow the Ulterra from the base of the motor by completing the following sequence:

1. Ensure that the motor is on.
2. Press and hold the POWER button located at the mounting base for 10 seconds.
3. The red and green LEDs will flash alternately, and motor will begin stow process.

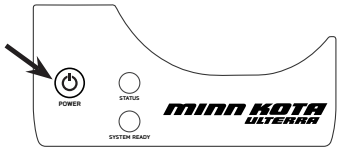

MANUAL STOW PROCEDURE - QUICK REFERENCE GUIDE

In the unlikely event that the motor will not stow from either the remote or foot pedal command, the following alternative stow methods should solve the issue:

1. Trim/Stow Reset Procedure (see reverse side)
2. Stowing from the Motor (see reverse side)
3. If your batteries lose power to the level that the motor will not stow, the motor will most likely stall at a 45 degree angle. If this occurs, reengage power, deploy the motor, trim motor to its highest setting, and turn power off until batteries can be recharged. Once batteries are charged, attempt to stow motor again.

If all three alternative methods have been tried and the motor will still not stow, there is a method to manually stow the motor. However, **once the motor has been manually stowed, it will be non-operational until it is manually reset by an Authorized Service Center.** If a manual stow must be done, follow the instructions below:

STEP 1

Remove right hand sideplate using a Phillips screwdriver.

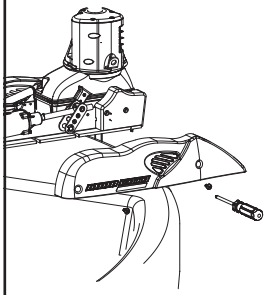

STEP 2

Using a Phillips screwdriver, loosen the screw on the manual tilt knob and then pry up with a flat blade screwdriver until it releases from the metal plates.

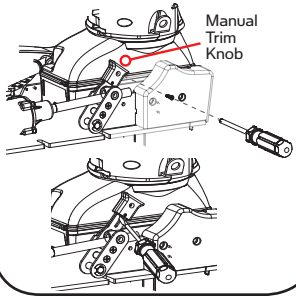

STEP 3

Pull manual trim handle out while lifting up on the trim housing until shaft and trim module can be pulled up by hand.

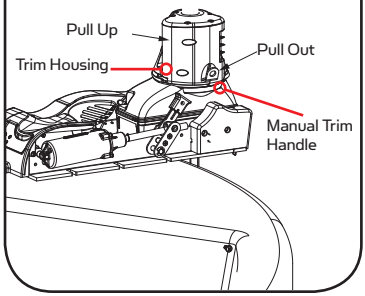

STEP 4

While pulling up on the bracket to release the latch pin, rotate and pull the lower unit onto the ramps.

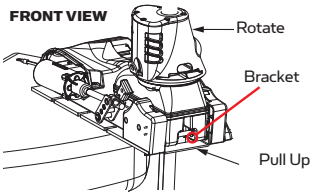

STEP 5

Secure lower unit onto the ramps using the provided emergency strap. The d-ring on the emergency strap can be hooked into the base as shown. This feature is located on the left side of the motor as viewed from the boat interior.

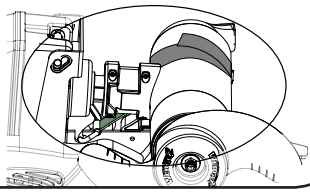

PROCÉDURES DE RÉINITIALISATION DE L'ÉQUILIBRAGE ET DU RANGEMENT DU MOTEUR ULTERRA

Dans le cas peu probable où le moteur Ulterra ne s'équilibrerait pas ou ne se rangerait pas, la procédure suivante réinitialisera le moteur et rétablira la fonctionnalité :

1. Appuyez et maintenez enfoncé le bouton POWER (mise en marche) situé sur l'embase support pour couper l'alimentation (le voyant DEL vert s'éteindra).
2. Appuyez sur le bouton POWER (mise en marche) jusqu'à ce que le voyant DEL vert s'allume.

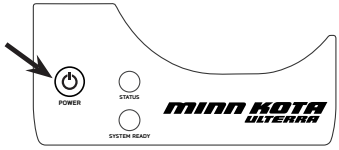

3. Attendez 3 secondes.
4. Appuyez 3 fois sur le bouton POWER (mise en marche) en l'espace de 2 secondes.
5. Les voyants DEL rouge et vert clignoteront continuellement et le moteur Ulterra exécutera la séquence automatisée suivante :
   - le moteur se placera dans l'orientation appropriée;
   - le moteur se relèvera automatiquement jusqu'à l'embase support et descendra d'environ 6 pouces (15,24 cm);
   - le voyant DEL rouge clignotant s'éteindra et le voyant DEL vert clignotant s'illuminera en vert de façon continue.

Le moteur Ulterra est maintenant réinitialisé et pleinement opérationnel.
Si le moteur Ulterra ne se réinitialise pas, répétez la procédure. Si la deuxième tentative échoue, veuillez contacter votre centre de service autorisé local ou appeler le service Minn Kota à 800 227-6433.

REMARQUE : Si l'unité inférieure du moteur est descendue de 6 pouces (15,24 cm) par rapport à l'embase support et que la coque du bateau entrave le rayon de virage du moteur, tournez manuellement la tête du moteur pour que l'unité inférieure soit perpendiculaire aux rampes du moteur avant de commencer cette procédure.

ARRIMAGE DU MOTEUR ULTERRA

Dans le cas peu probable que votre télécommande arrête de fonctionner, vous pouvez arrimer l'Ulterra de la base du moteur en effectuant la séquence suivante :

1. Assurez-vous que le moteur est en marche.
2. Appuyez et tenez le bouton d'ALIMENTATION, situé à la base de montage, pendant 10 secondes.

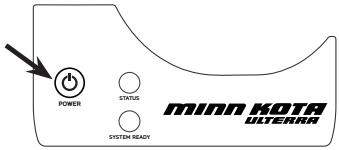

3. Les lumières à DEL rouge et verte clignoteront en alternance et le moteur commencera le processus d'arrimage.

GUIDE DE RÉFÉRENCE RAPIDE ARRIMAGE D'URGENCE

In the unlikely event that the motor will not stow from either the remote or foot pedal command, the following alternative stow methods should solve the issue:

1. Trim/Stow Reset Procedure (see reverse side)
2. Stowing from the Motor (see reverse side)
3. If your batteries lose power to the level that the motor will not stow, the motor will most likely stall at a 45 degree angle. If this occurs, reengage power, deploy the motor, trim motor to its highest setting, and turn power off until batteries can be recharged. Once batteries are charged, attempt to stow motor again.

If all three alternative methods have been tried and the motor will still not stow, there is a method to manually stow the motor. However, **once the motor has been manually stowed, it will be non-operational until it is manually reset by an Authorized Service Center.** If a manual stow must be done, follow the instructions below:

ÉTAPE 1

Retirer la plaque latérale droite à l'aide un tournevis Philips.

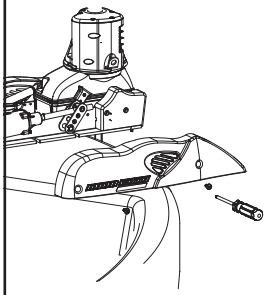

ÉTAPE 2

À l'aide d'un tournevis Phillips à lame plate, puis soulevez l'aide d'un tournevis à tête plate jusqu'à ce qu'il libère des plaques métalliques.

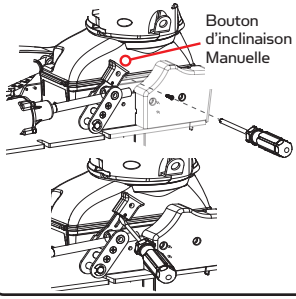

ÉTAPE 3

Tirer la poignée de compensation manuelle tout en soulevant le boîtier de compensation jusqu'à ce que l'arbre et le module de compensation puissent être tirés vers le haut à la main.

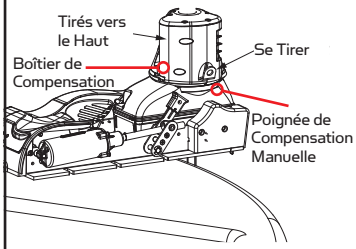

ÉTAPE 4

En tirant sur le support pour libérer la goupille de verrouillage, tourner et tirer l'unité inférieure sur les rampes.

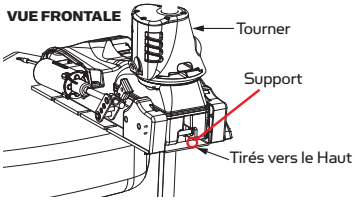

ÉTAPE 5

Fixer l'unité inférieure sur les rampes en utilisant la sangle d'urgence fournie. Le mousqueton en D sur la sangle en cas d'urgence peut être accroché dans la base, comme illustré. Cette fonction se trouve sur le côté gauche du moteur, vu de l'intérieur du bateau.