GRAUVELL FISHING S.A.

P.O. Box 220, 08130 Santa Perpetua de Mogoda, Spain

www.grauvell.com

grauvellfishing@grauvell.com

MOTOR ELECTRIC AQUASPORT LEMAN 54

MANUAL

Congratulations on your purchase of a easy–carrying electric boat motor!

This motor developed by our company is specially designed to suit for the use of east–going.High quality materials,superior design and state–of–the–art engineering make this motor a long–lived and reliable companion in all situations. As a means of constant product improvement,we reserve the right to change parts and components without notice.Please read this manual carefully to avoid potential operating errors.

Warranty terms

We offer a two (2) year warranty on the Kangle electric boat motor,beginning on the date of purchase (valid only in connection with your purchase receipt).
The warranty does not extend to wearing parts,e.g.graphite brushes,props and switches.The warranty is limited to non–commercial use of the motor and does not apply in case of operating errors,accidents,improper repair or modification.
By our company.
The warranty applies only for use in freshwater and is invalid when the motor has been used in saltwater.

Assembly

Attach the motor to the stern of the boat.Make sure you tighten both mounting bolts securely.(fig.A)
To adjust the angle of the motor following attachment,hold the motor head with one hand and depress the positioning pin with your other hand .Press and hold the pin until the desired angle has been reached.Release the pin and verify that the mechanism engages securely.(fig.B)
Caution!When adjusting the tilt angle of the motor,NEVER put your hands between the shaft and the hull of the boat–you might be injured!Make sure you detach the motor before taking the boat out of the water. When mounting or detaching the motor,make sure that the battery is disconnected.

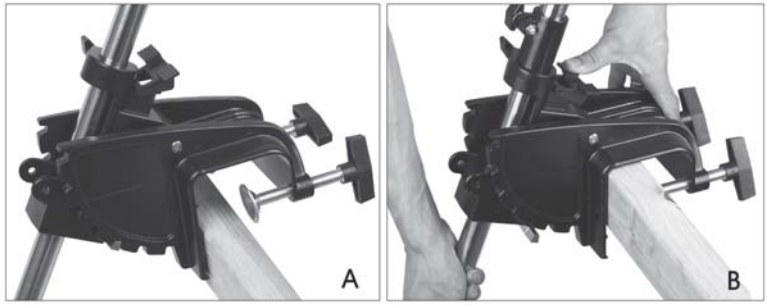

Adjusting the depth

Hold the motor shaft with one hand ,then loosen the depth adjustment screw and set the motor to the desired depth.Then retighten the adjusting screw securely .(fig.C①)

Adjusting the steering force

To adjust steering–counterforce,simply loosen or tighten the counterforce bolt. (fig. C②)

Adjusting the sailing speed

The telescopic tiller can be extended up to a length of 16cm.The speed control(5 forward and 2 reverse speeds) is integrated in the turning handle.Turn the handle clockwise to select forward speeds.Turn the handle counter–clockwise to select reverse speeds.Turning the handle into the neutral position automatically stops the motor.(fig.D,E)

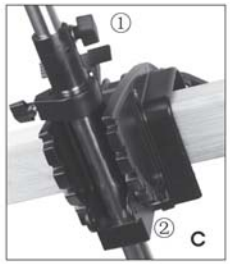

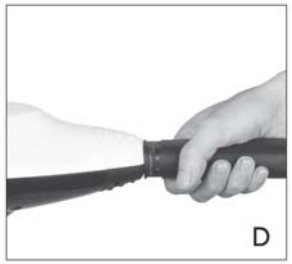

Changing propellers

Caution:ALWAYS disconnect the battery prior to changing the propeller

Detaching the propeller

Unscrew and remove the locknut using the propeller wrench supplied,taking care to hold the propeller with one hand to prevent it form revolving.Do not loosen the locknut with a hammer or similar tool,as this may cause damage to the locknut or shaft.(fig.F)

Once the locknut has been removed,the propeller can be taken off easily.Verify proper fit of the groove and shearing pin when mounting the new propeller,otherwise the propeller will not attach properly.(fig.G)

After using the motor,always check for fishing line or weeds that may have got caught in the propeller and remove.Wash off the motor thoroughly with running water,especially after using it in saltwater venues.

Electrical connections(Diagram).For prescriptive battery only!

Prior to making electrical connections,please ensure that all switches are in the OFF position

Connect the red battery cable (A)to the positive battery terminal (labeled(+)on the battery).

Connect the black battery cable(B)to the negative battery terminal(–).

We recommend installing a 50 Amp breaker to the red battery cable.Connect the terminal clamps securely.Otherwise you may have trouble using the motor.

The battery should always be kept in a well–ventilated location .We recommend using special low charge marine battery for optimum performance. Please see below sheet of recommended battery specification.

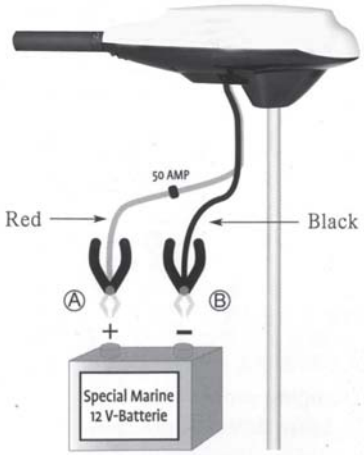

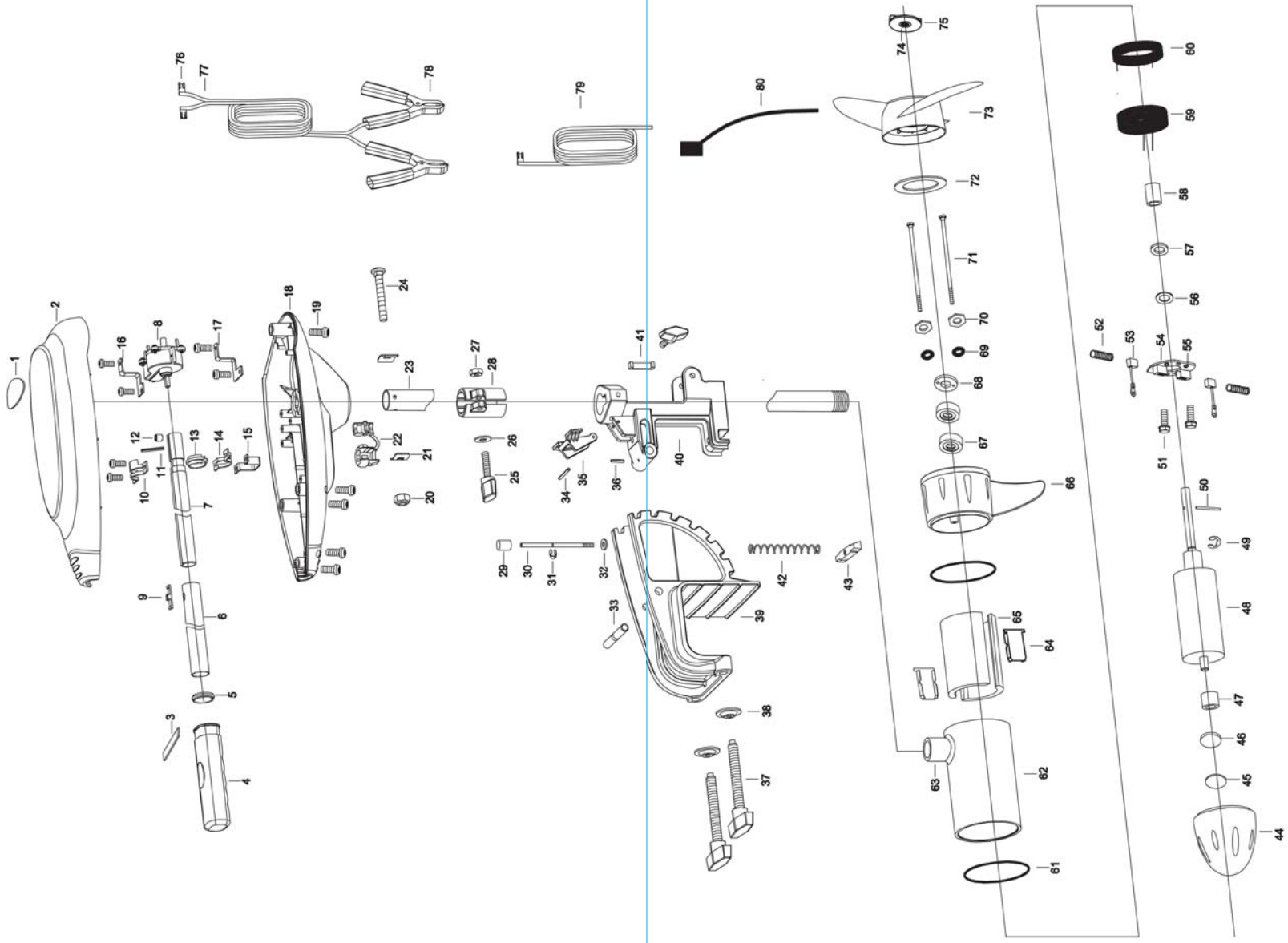
1
2
3
4
5
6
7
8
9
10
11
12
13
14
15
16
17
18
19
20
21
22
23
24
25
26
27
28
29
30
31
32
33
34
35
36
37
38
39
40
41
42
43
44
45
46
47
48
49
50
51
52
53
54
55
56
57
58
59
60
61
62
63
64
65
66
67
68
69
70
71
72
73
74
75
76
77
78
79
80

1 lable
2 box cover of operation
3 shift indication
4 handle
5 fixing loop of handle
6 operation pole
7 inner axes of operation
8 speed adjustor
9 extension adjustment chunk
10 fixing pieces of operation pole
11 fixing pin
12 fixing bolt
13 fixing loop of operation
14 fixing loop of operation II
15 fixing loop of operation III
16 fixing pieces of speed adjustor
17 fixing pieces of speed adjustor II
18 backseat of operation box
19 selftapping screw M4
20 nut M6
21 spring gasket
22 fixing lock of lead
23 main tube
24 bolt M6*45
25 bolt M6*48
26 gasket
27 nub M6
28 adjustment harness of water level
29 button of alterative axes
30 alterative axes
31 Snap Rings
32 gasket
33 pin
34 flexible pin
35 papilionaceous button
36 flexible pin
37 fixing bolt M12
38 papilionaceous gasket
39 bracket
40 pipe covering
41 packing of pipe covering
42 spring
43 localizer
44 rear covering
45 gasket
46 gasket
47 axes with oil
48 rotor
49 Snap Rings
50 pin
51 bolt M5*16
52 spring
53 carbon brush
54 PC board
55 riser
56 gasket
57 gasket
58 axes with oil
59 resistance I
60 resistance II
61 O sealing ring
62 shell body
63 nut M26*1.25
64 block piece
65 alnico
66 frontal covering
67 sealing ring of framework
68 tube of oil seal
69 O sealing ring
70 hexangular gasket
71 screw
72 gasket
73 impeller
74 rabbet joint of nut
75 nut
76 Cool Terminal
77 power code
78 clamp of power
79 lead
80 nylon block tape

TABLE ONE

Model	Maximum Thrust (lb)	Control Method	Various Speed	Voltage (V)	Maximum Current (A)	Fixing Way Between Boat and Motor	Recommend Battery Specification	Battery Quantity
F18	18	by Hand	For 2/Re2	12	15	Mount Assembly	12V x 100AH	1
F34	34	by Hand	For 5/Re2	12	32	Mount Assembly	12V x 100AH	1
F44	44	by Hand	For 5/Re2	12	40	Mount Assembly	12V x 100AH	1
F54	54	by Hand	For 5/Re2	12	48	Mount Assembly	12V x 100AH	1
F65	65	by Hand	For 5/Re2	24	42	Mount Assembly	12V x 100AH	2

Trouble shooting guide

Problem	Possible cause/solution
Propeller action might be "stiff"	1.Check to see if line or weeds have got caught in the propeller. Clean propellers. 2.Check the battery charge status. 3.Check the terminals on the battery cable.
Motor sounds too loud and/or shake	1.check to see if line or weeds have got caught in the propeller. clean propellers. 2.Check if the propeller is secure.Replace the propeller if necessary. 3.Check to see if the shaft is bent.Detach propeller and rerun motor visually check if the shaft shake or not.If shaft deformed,please contact Kangle Service Department. 4.Disconnect the battery cable.Turn the propeller by hand,it shall turn freely with a slight magnet drag.If it binds or is locked up,chipped magnets or other debris maybe in the motor , please contact Kangle Service Department.
Motor loss one or more speeds	1.Loose connection in wiring.Please check and correct. 2.Switch may be burned,please change a new one and see the below sheet of lines connection.(fig.H) 3.Speed coils in motor unit may be burned, please contact Kangle Service Department.
Motor is hard to steer	1.Loosen counterforce screw,then readjust and apply some lubricant.

For all other problems not listed above, please contact our Customer Services.

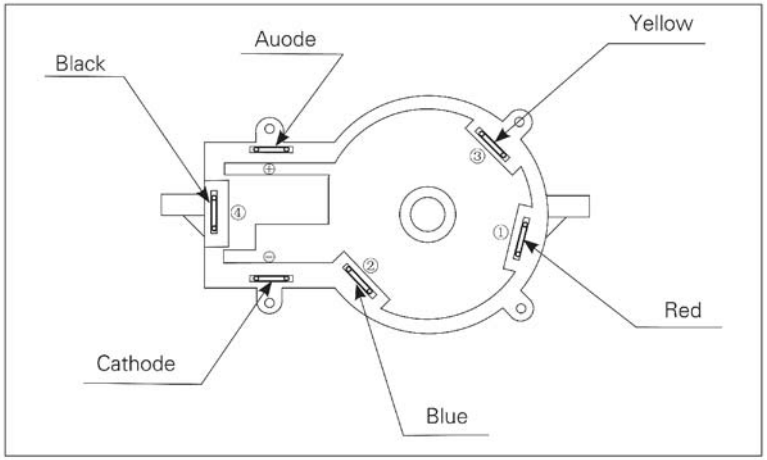

Maintenance

Item	Interval	procedure
Clean the whole unit	After each use	clean the motor with fresh water after each use especially after use in saltwater .
Clear behind prop	After each use	Remove prop and check for fishing line,weeds or other debris.Any debris wrapped around or shaft will causea loss in power.
Check all nuts,bolts, screws	Every two weeks	The screws and moving parts of the suspension assembly should be lubricated with non–aerosol lubricant.
Clean terminal connection	Every month	Make inspectionfor loose or corroded terminals and/or frayed wires.Clean the terminals.Lack of this type maintenance wil cause excessive heat and/or loss of power.

Using condition and storage

Please do not use the motor in salt water.Please do not use the motor in the water with many sundries and foul condition.Please do not use the motor as the main power of collision amusement and long time transport.Problems caused by these using conditions above will be deemed as operating errors.Kangle will not provide warranty to these conditions.Lubricate both moving parts and screws,then remove motor and store in a well–ventilated and dry place.Do not leave motor outside in winter for long periods of non use. This will demage the permanent magnet in the motor.