Touch 5 User & Installation Manual

v1.0

Copyright

Important

BEP Marine strives to ensure all information is correct at the time of printing. However, the company reserves the right to change without notice any features and specifications of either its products or associated documentation.

Translations: In the event that there is a difference between a translation of this manual and the English version, the English version should be considered the official version.

It is the owner's sole responsibility to install and operate the device in a manner that will not cause accidents, personal injury or property damage.

Table of Contents

Table of Figures

1 General Information

1.1 Description

The CZone Touch 5 is a 5” colour touch-screen, which operates as a Display Interface on any new or existing CZone network. It is designed for a wide range of applications, and can withstand the harsh marine and recreational vehicle environments. With its bright touch screen and multiple levels of backlighting, the Touch 5 provides fast and positive operation in all visibility conditions. Together with toughened glass and water proofing, this makes it suitable for exposed locations. The Touch 5 can also be configured as a Wireless Interface, allowing wireless control and monitoring with the CZone iPad App.

1.2 Overview

1.2.1 Front Controls

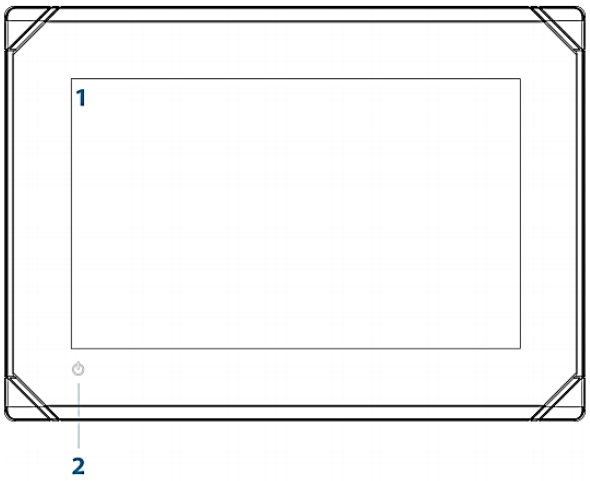

1. Touch Screen
2. Power Button – Press and hold to turn the unit ON

1.2.2 Rear Connections

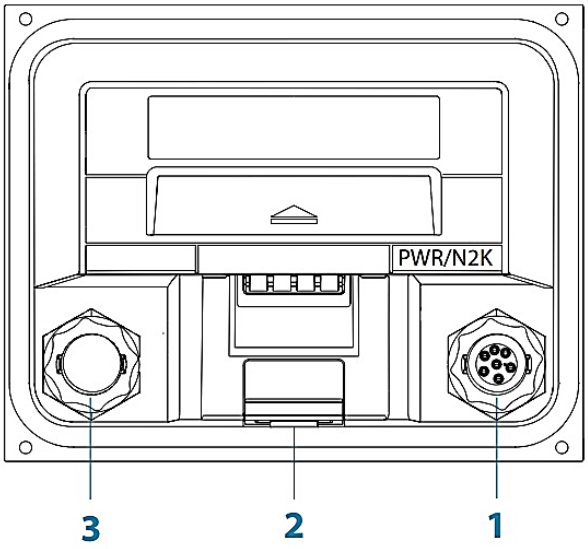

1. 12VDC Power and NMEA 2000
2. MicroSD Card Reader
3. Unused

1.2.3 In The Box

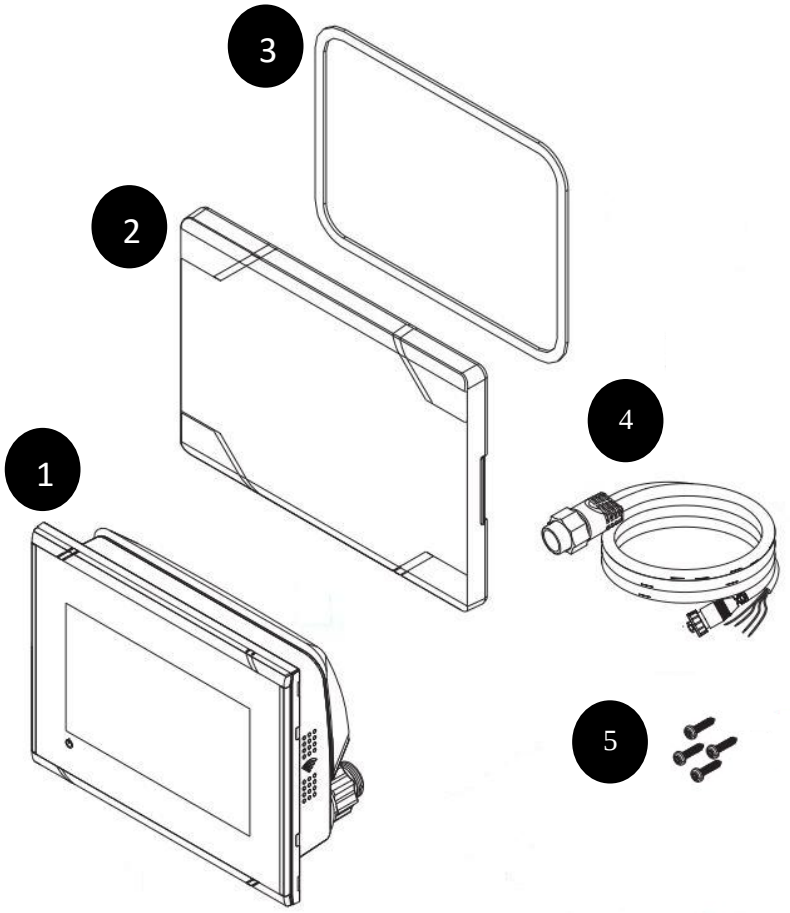

1. Touch 5
2. Sun Cover
3. Panel mount gasket
4. Power/NMEA cable
5. Panel mount screws

1.2.4 Card Reader

Used for attaching a microSD memory card. The memory card can be used for software updates. The card reader door is opened by pulling the rubber cover open. The card reader door should always be securely shut immediately after inserting or removing a card, in order to prevent possible water ingress.

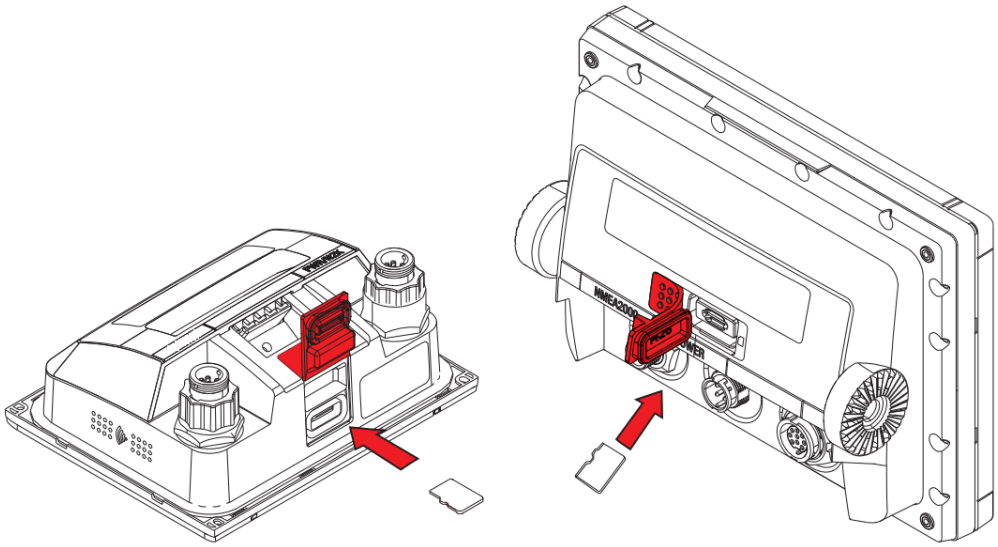

2 Installation

2.1 Mounting Location

Choose the mounting locations carefully before you drill or cut. The unit should be mounted so that the operator can easily use the controls and clearly see the screen. Be sure to leave a direct path for all of the cables. The unit has a high-contrast screen, and is viewable in direct sunlight, but for best results install the unit out of direct sunlight. The chosen location should have minimal glare from windows or bright objects. Choose an area where the unit will not be subjected to excessive vibration, or heat. Good ventilation is required.

Warning!: Inadequate ventilation may cause the unit to overheat. The unit is designed to operate in temperatures from -15° C to +55° C (+5° F to +131° F).

2.2 Panel Mounting

The screws and gasket used for panel mounting are included in the box. For mounting instructions, refer to the Panel mounting template.

2.3 Wiring

Warning!: Before starting the installation, be sure to turn electrical power off. If power is left on or turned on during the installation, fire, electrical shock, or other serious injury may occur. Be sure that the voltage of the power supply is compatible with the unit.

Warning!: The unit has a voltage rating of 12 V DC, it is not suited for use with 24 V DC systems.

The unit is powered by 12 V DC. It is protected against reverse polarity, under voltage, and over voltage (for a limited duration). The plug of the supplied power cable has two discrete cables exiting from it. The thickest of the two cables provides the following:

- Power into the system (Red and Black wires).
- Controlling power state of the unit (Yellow wire)

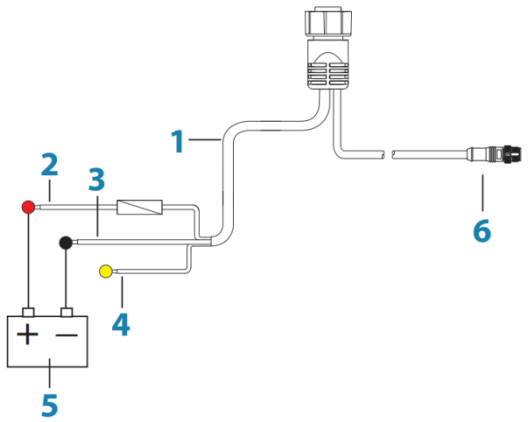

Figure 1. Battery & Power Connections

1. Power cable
2. 12 V DC positive wire (red) shown with fuse holder fitted
3. 12 V DC negative wire (black)
4. Power control wire (yellow)

5. 12 V DC supply
6. NMEA 2000 cable and connector

Connect Red to (+) DC using a 3 amp fuse. Connect Black to (-) DC.

2.4 Power Control Connection

The yellow Power Control wire in the power cable is an input that will turn on the unit when power is applied.

2.4.1 Power Control Unconnected

Device will turn on when the power button on the front of the unit is pressed. Leave the yellow Power Control wire disconnected and tape or heat-shrink the end to prevent shorting.

2.4.2 Power Control To Supply Positive (Auto On)

Device will turn on immediately when power is applied. Common the yellow wire with the red wire after the fuse.

2.5 NMEA 2000 Backbone

Run an NMEA2000 cable from the NMEA2000 connector to an NMEA2000 network backbone

3 Getting Started

3.1 First Power Up

If connecting Touch 5 to an existing CZone network, ensure the display has been added to the CZone configuration file and assigned a dipswitch. Every CZone device on a network requires a unique dipswitch to operate correctly, and the Touch 5 has a virtual dipswitch. Refer to the CZone Configuration Tool manual for this process.

1. Turn on the circuit breaker or switch supplying power to the Touch 5.

2. The CZone splash-screen will appear for about 10 seconds then the text ‘Starting Configuration Claim’. Touch 5 will now read the CZone configuration file from the network.

3. When configuration has been successfully read the text ‘Configuration Successful’ will appear. It is also possible to write the configuration to the network at a later date for new installations.

4. Select the virtual dipswitch from the list of configured CZone devices, for new installations the dipswitch can be set by selecting Dipswitch from the Settings > System page.

5. Once dipswitch has been set the Modes page from the configured system will appear.

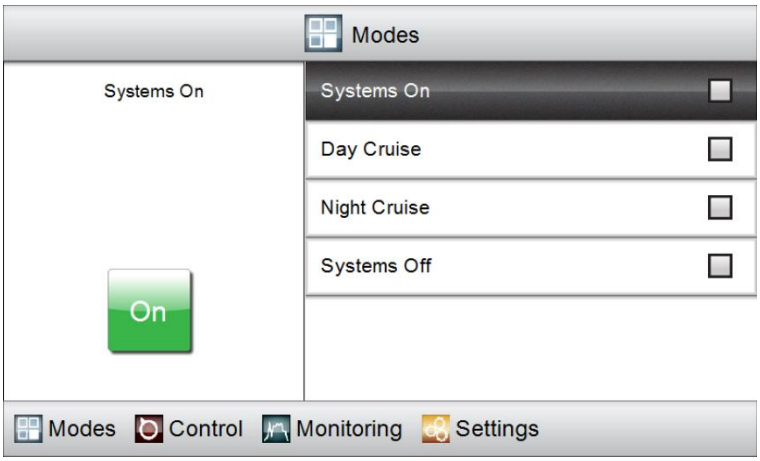

6. To ensure network connections are good and that the display can see the rest of the CZone devices go to the Settings > Network page and check configured modules are showing 'Online'.

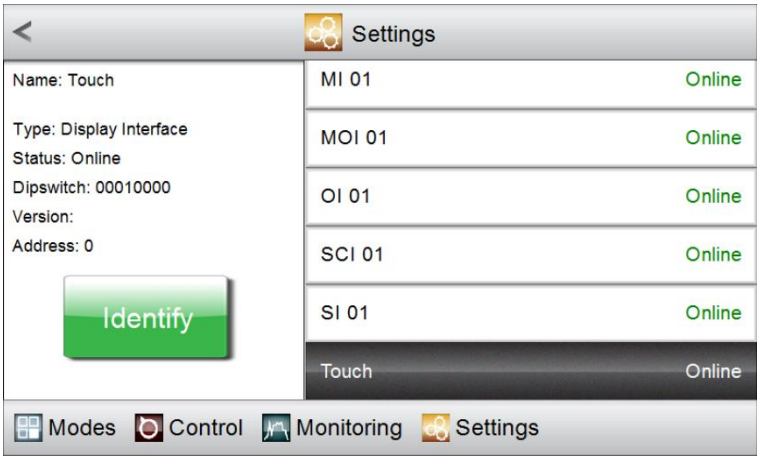

7. Update software if a newer version is available. Refer to Chapter 4.3 for this process.

8. Touch 5 is now ready for use.

4 Operations in Detail

4.1 Accessing a Function within its Group

4.1.1 Groups of Functions, and the Tabbed Main Menu

CZone operations are divided into four functional groups:

1. **Modes** - complete setups for operating the vessel in a consistent way: for example, when docked; cruising at night or in daylight; at anchor; and so on
2. **Control** - individual control of the vessel's equipment, such as pumps, lights, and power isolators
3. **Monitoring** - measurement of the vessel's devices and subsystems, including tank levels, AC and DC power sources such as batteries and inverters, alarms and others
4. **Settings** - set CZone parameters, rather than other on-board equipment. This includes units of measurement, backlight settings, time zones, etc.

Touch 5 offers a tab-based main menu, with a "home tab" for each of the above functional groups. (The menu is shown in Figure 2. Touch 5's Tab based Main Menu

It is displayed along the bottom of the screen at all times except when a keypad is shown.)

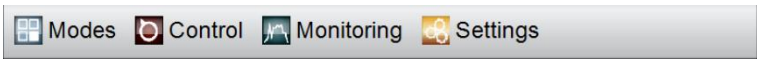

Figure 2. Touch 5's Tab based Main Menu

To access any function in a group, start by clicking its home tab. The GUI will display the tab's home page, a top-level selection with functions divided more finely into sub-categories. (See Figure 3 for an example.)

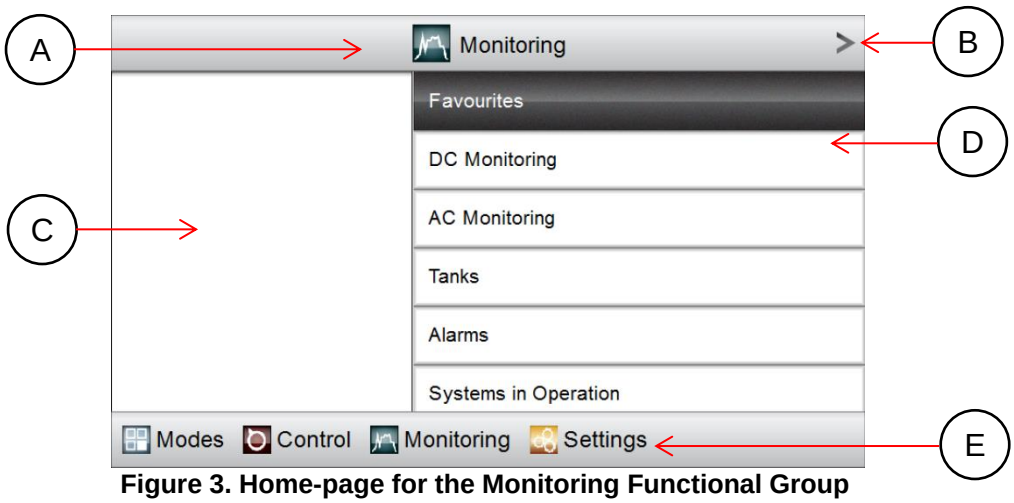

Figure 3. Home-page for the Monitoring Functional Group

A Title, showing name of current functional group.

B Accept button. Clicking this has the same effect as clicking the highlighted sub-category.

C Display panel. (This remains blank unless used by the current function)

D Sub-categories available for further selection. (In this example, clicking the Accept button will drill down further into the highlighted Favourites sub-category.)

E Tab-based main menu.

4.2 CZone Functions by Group

4.2.1 Modes

The Modes group is very simple to navigate because it has only one level. This is deliberate: changing modes is intended to reconfigure the systems operation as easily as possible. Modes will vary between vessel or vehicle and are usually configured by the builder, although can be modified at a later date with the CZone Configuration Tool.

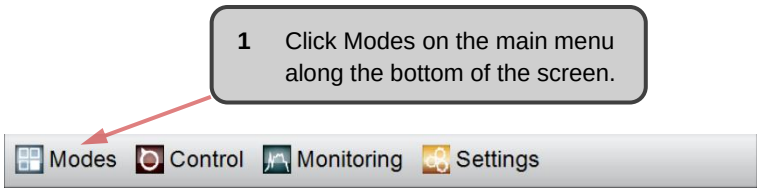

The Modes home-page appears, listing all available operating modes that have been configured for the system. The topmost mode is highlighted. The following is an example screen showing how to change modes:

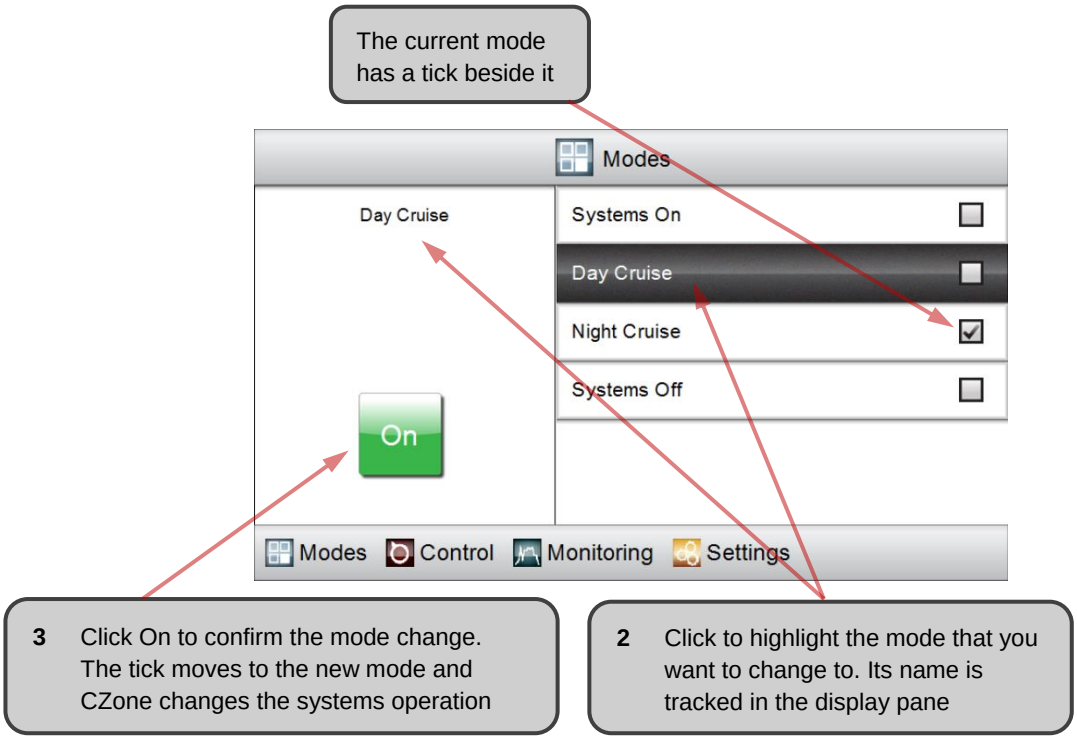

Modes are configured by the builder using the CZone Configuration Tool. Only one mode from a 'mode group' can be selected at a time; most systems have only one mode group.

If the Modes page has ticks beside two or more modes then the system has more than one mode group. In that case several modes can be in force at a time, one from each group, and an Off button may appear beside the On button shown above.

Below is an example which summarises the effect that selecting a mode has on the vessels systems. The builder should supply a similar summary for each of the modes configured.

	Modes Configuration			
	Systems On	**Day Cruise**	**Night Cruise**	**Systems Off**
Backlight Zone 1	On	On	On (30.0%)	Off
Cabin Lights	On	Off	On (2.0%)	Off
Charger	Not Used	Not Used	Not Used	Not Used
Courtesy Lights Blue	Off	Off	On	Off
Courtesy Lights White	On	On	Off	Off
Fan	Off	On	On	Off
Fresh Water Pump	On	On	On	Off
Galley Lights	On	Off	On (2.0%)	Off
Hatch Lifter	Not Used	Not Used	Not Used	Not Used
Navigation Lights	Off	Off	On	Off
Saloon Lights	On	On	On (2.0%)	Off

Figure 4. Modes Configuration Example

4.2.2 Control

The main menu's Control tab accesses all configured circuits on the CZone network.

Depending on which CZone modules are on the network, you may have one or more of the following four circuit types:

- **DC Control** - 12V or 24V DC loads, such as LED lights and fresh-water pumps.
- **AC Control** - 120V or 230V AC loads, such as air conditioning and AC outlets.
- **AC Mains Control** - a page for controlling/monitoring AC mains supplies (e.g. generator and/or shore power). (Note: Requires a CZone AC Mains Interface.)
- **Inverters/Chargers** - a page for controlling/monitoring Mastervolt Inverter/Chargers.

All AC and DC circuit types are accessible through the All circuit category. Circuits may also be assigned a group category such as Lights or Pumps which allows circuits on large systems to be accessed quickly. There may also be a Favourites category which will be configured by the builder for fast access to essential circuits.

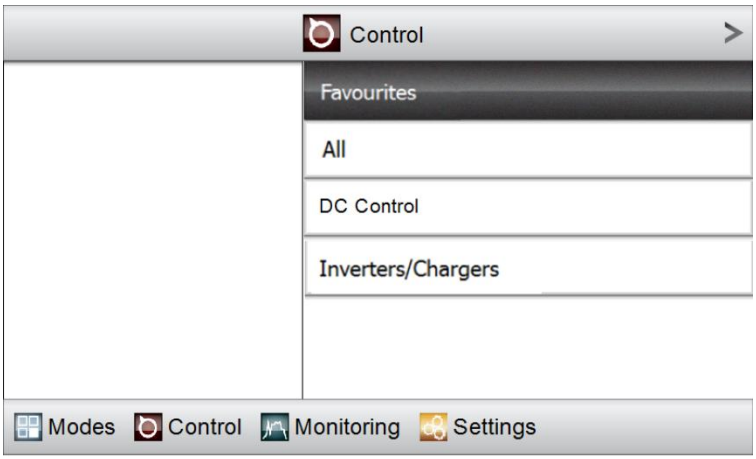

Figure 5. Control Page

4.2.2.1 DC Control and AC Control Circuits

All DC Control and AC Control circuits behave in a similar way. An example is shown below:

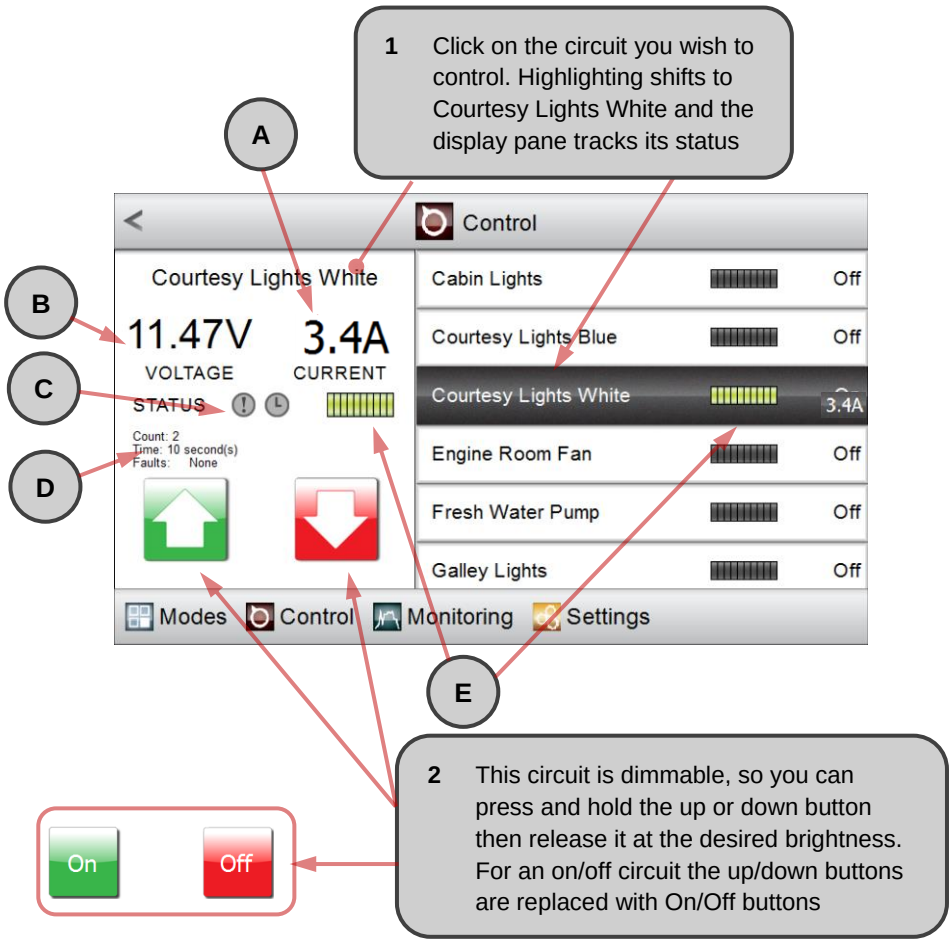

A Current draw is tracked while the circuit is active, or shown as Off

B The voltage from the battery supplying the circuit (if configured) is tracked while the circuit is active, or shown as ▬ ▬ ▬

C The alarm status is grey while the circuit is operating correctly. If an alarm is raised this indicator changes to ⓘ.

D On Count tracks the number of times the circuit has been activated.
On Time displays the aggregate time for which the circuit has been active.
Faults reports the most recent fault raised by the circuit, or None if it is operating correctly.

E The status bars are dark while the circuit is inactive. When an on/off circuit is active, these indicators change to ▮▮▮▮▮▮▮▮▮▮. The example circuit is dimmable, so the number of lit segments in each status bar tracks the circuit's setting. When an alarm is raised, the status bars change to ▮▮▮▮▮▮▮▮▮▮.

4.2.3 Monitoring

The main menu's Monitoring tab accesses all configured metering on the CZone network.

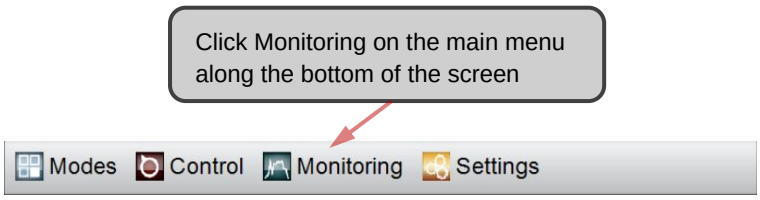

Depending on which CZone modules are on the vessel, you may have one or more of the following five monitoring types:

- **DC Monitoring** - 12V or 24V supplies such as house or starter batteries, and chargers
- **AC Monitoring** - 120V or 230V AC sources, such as shore power supplies, on-board generators and inverters
- **Tanks** – levels for tanks such as fresh-water, fuel, black water or grey water
- **Alarms** - Alarm history, and unacknowledged alarms at four severity levels: Warning, Standard, Important and Critical
- **Systems in Operation** - access to all configured circuits that are active, in the same categories that appear under the Control menu.

There may also be a Favourites category which will be configured by the builder for fast access to essential meters.

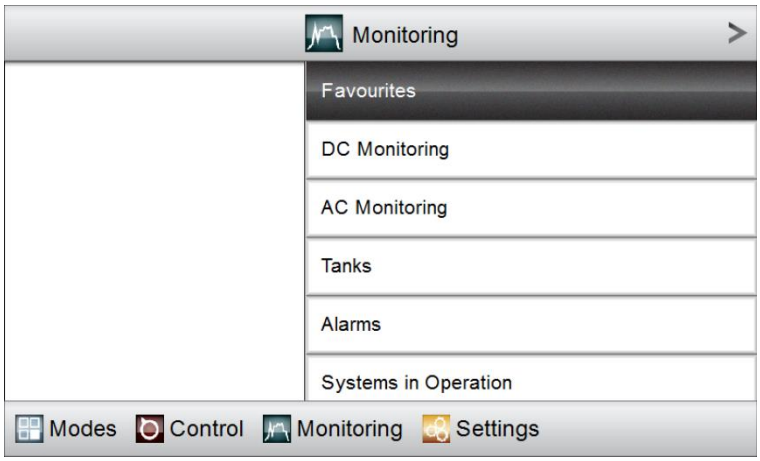

Figure 6. Monitoring Page

4.2.3.1 DC Monitoring

All DC Monitoring meters behave in the same way. An example is shown below:

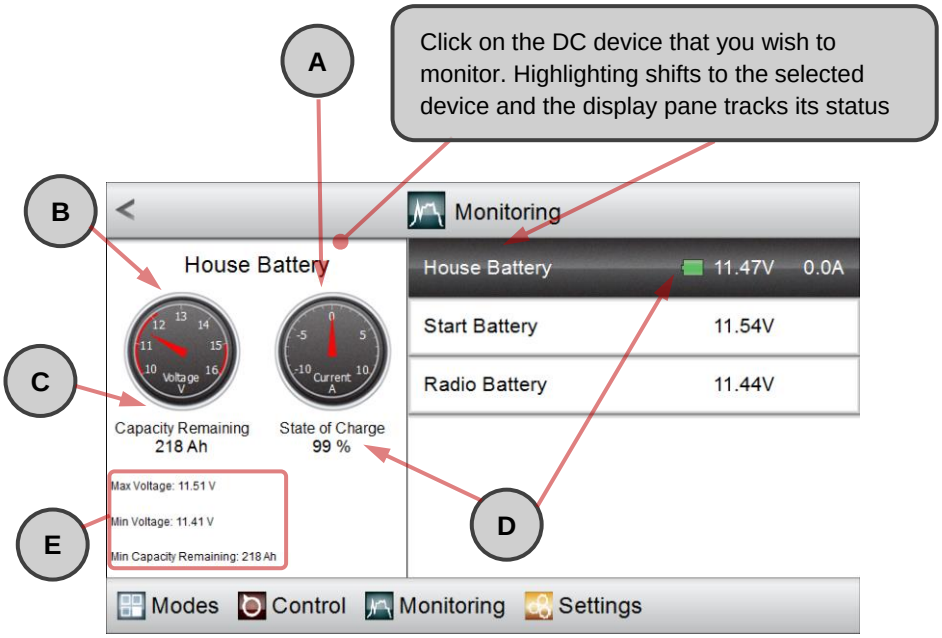

A An analogue gauge is mimicked to show the current draw

B Another gauge shows the voltage

C The calculated remaining capacity is shown, in amp-hours

D The calculated charge-state is shown, as a percentage of full charge and as the green portion of a small icon resembling a cell

E The maximum and minimum recent states of the battery are reported.

4.2.3.2 AC Monitoring

All AC Monitoring meters behave in the same way. An example is shown below:

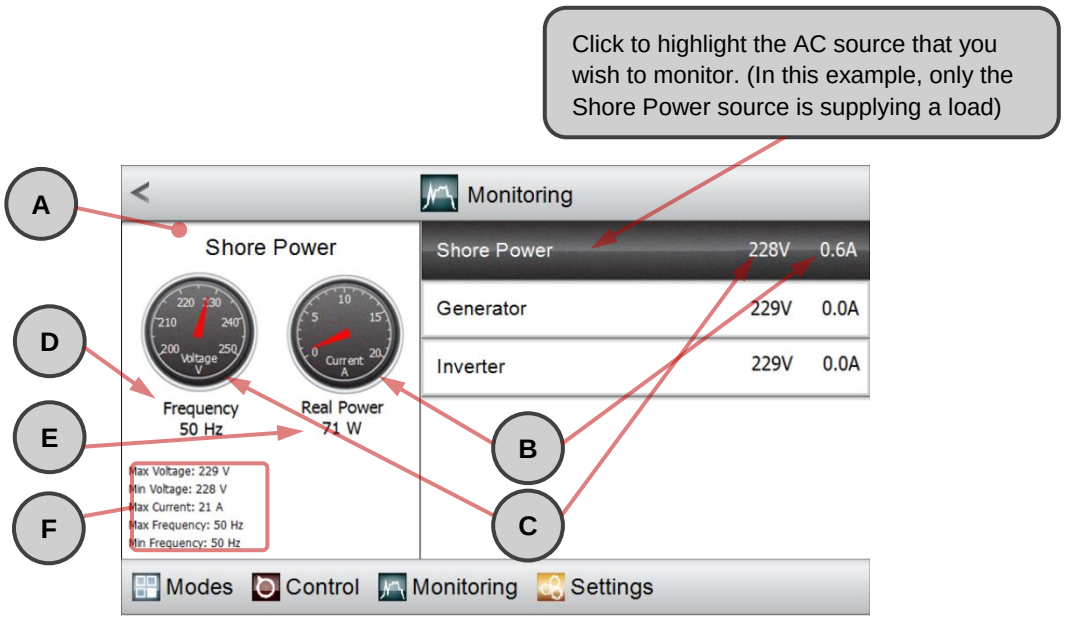

A The status of the selected AC Mains source is detailed in the display panel

B The current drawn by all load groups supplied by the source is shown, to the right of the highlighted name and using an analogue meter gauge

C The RMS voltage of the selected AC Mains source is shown, also in the highlighted region and using an analogue meter gauge

D The frequency of the AC Mains source is shown

E The real power being supplied to all load groups supplied by the source is shown

F Worst-case recent performance of the selected source is shown, including:

- maximum and minimum RMS voltages
- maximum current draw by all supplied load groups
- maximum and minimum supply frequency.

4.2.3.3 Tanks

All Tank monitoring meters behave in the same way. An example is shown below:

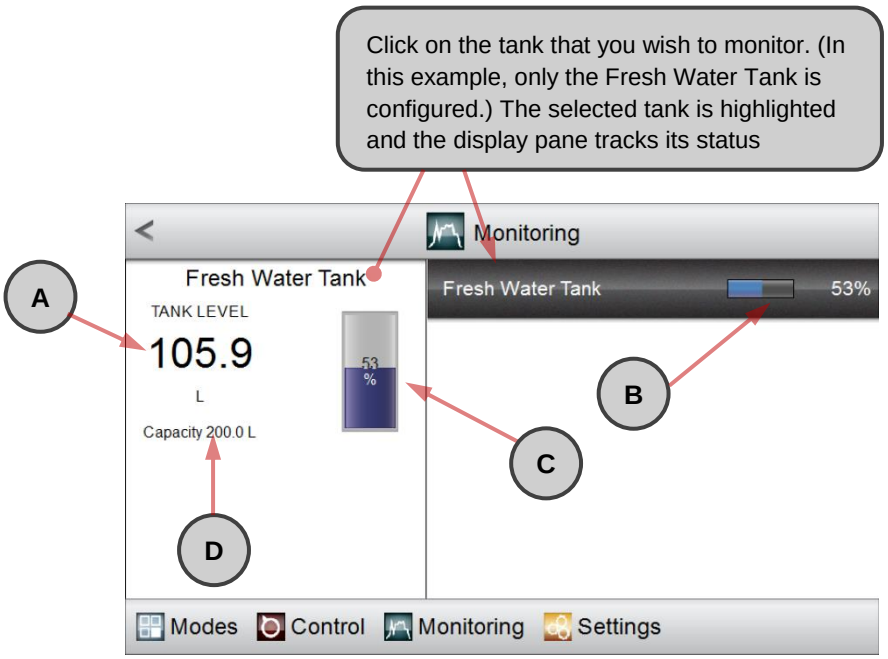

A The current level in the tank is displayed, using the configured units

B The tank's level is reported in the highlighted section, as a percentage and as the blue portion of a status bar

C In the display pane, a cylindrical tank mimic shows the tank level in blue and as a percentage

D The capacity of the tank is shown in the configured units.

4.2.3.4 Alarms

Alarm monitoring behaves in the same way for all levels of severity. On selecting Alarms from the Monitoring home-page you can select historical alarms, or active alarms of any severity.

4.2.3.4.1 Alarms of a Selected Severity

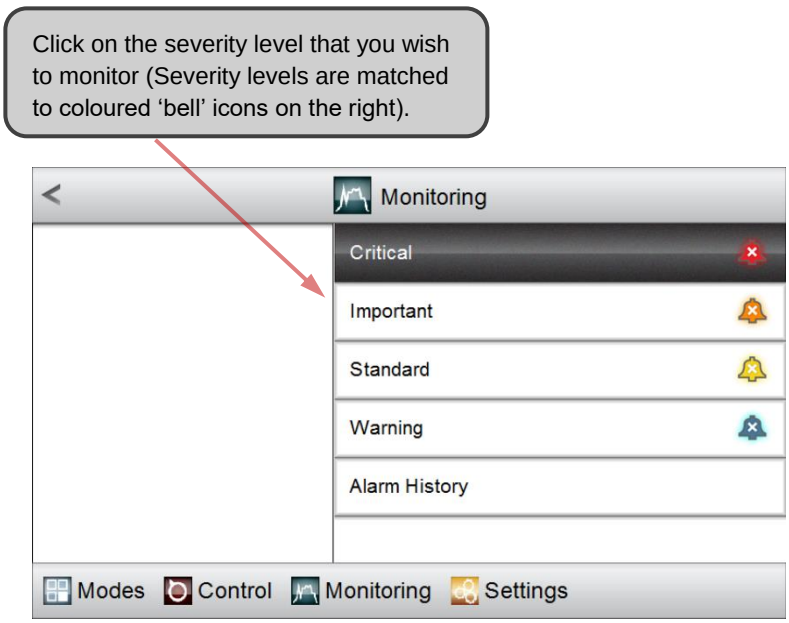

Below is a list of the different CZone alarm severities and their behaviour:

Alarm Level	Bell Colour	Action on Trigger	Additional Note
Critical	Red	Full-Screen Dialog, Audible Tone	Acknowledgement times out after 10 minutes then re-alarms
Important	Orange	Full-Screen Dialog, Audible Tone	Acknowledgement times out after 10 minutes
Standard	Yellow	Full-Screen Dialog	Full-screen dialogue disappears once alarm is acknowledged
Warning	Blue	Bell Appears	Bell disappears once alarm is acknowledged

Figure 7. CZone Alarm Severity Definition

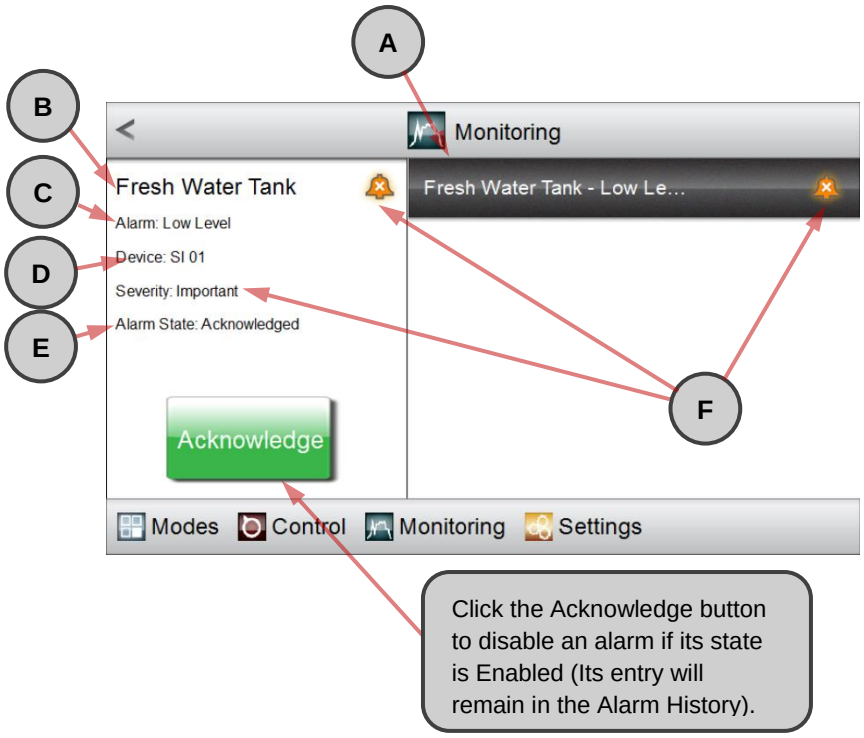

A A list of active alarms appears, all with the selected severity level. More-recent alarms are listed first. (In this example, the Low Level alarm from the Fresh Water Tank is the only important alarm currently active.)

B The name of the input that raised the alarm is shown in the display pane

C The name of the alarm is displayed

D The CZone module that detected the alarm is shown

E The alarm state is shown: either Enabled or Acknowledged.

F The alarm severity is described in words, and with a bell-shaped icon of the appropriate colour.

4.2.3.4.2 Alarm History

Selecting Alarm History from the Monitoring > Alarms page displays the most recent alarms (up to 100). Alarms are listed according to when they were raised, with the most recent first. Alarm history includes all alarms above Warning severity by default. The minimum severity saved in history can be changed from the Settings > System > Alarm Log Severity page.

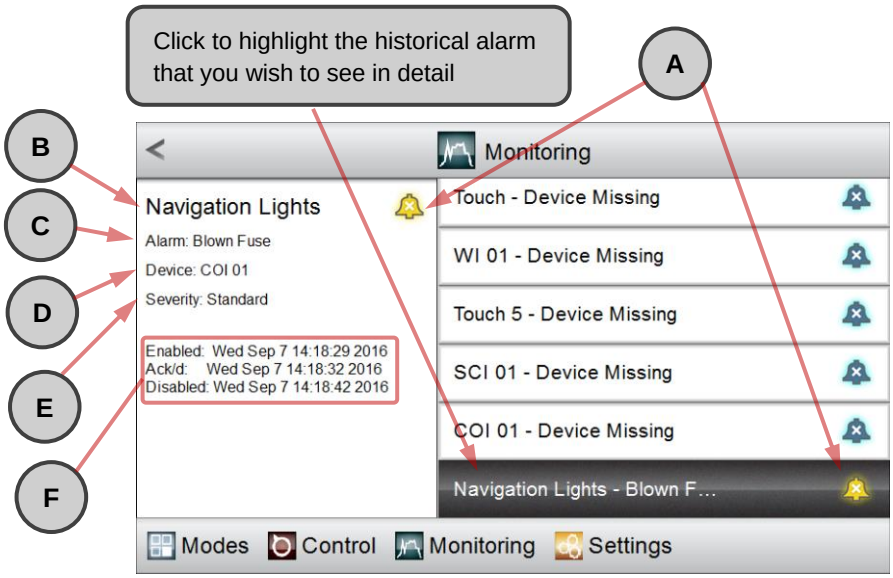

A The alarm severity is indicated with a bell-shaped icon of the appropriate colour

B The name of the input that raised the alarm is displayed

C The name of the alarm is shown

D The CZone module that detected the alarm is shown

E The severity of the alarm is reported in words

F The date/time stamps for the alarm are:

- when it was raised (i.e. enabled)
- when it was acknowledged
- when it was cancelled (i.e. disabled).

4.2.3.5 Systems in Operation

The Systems in Operation page lists all circuit categories that are configured for the vessel: for example Pumps, Fans/Ventilation, and Lighting. Selecting any category displays all active circuits in that category; alternatively, selecting All displays all active circuits regardless of their category.

Systems in operation behave exactly as DC or AC Control circuits: selecting a circuit displays its status and allows the circuit to be controlled.

4.2.4 Settings

The Settings tab lets you query and change various parameters of the Touch 5, including: measurement units (gallons, litres, etc.); the network configuration; date/time and others.

4.3 Updating Software

To keep the Touch 5 up to date with the latest software refer to www.czone.net . It is recommended to update the entire CZone system when updating the Touch 5 to ensure the system operates correctly. The Touch 5 can be updated via the microSD card slot, see process below:

4.3.1 Checking Current Software Version

To check the current software version on the Touch 5 go to Settings > About

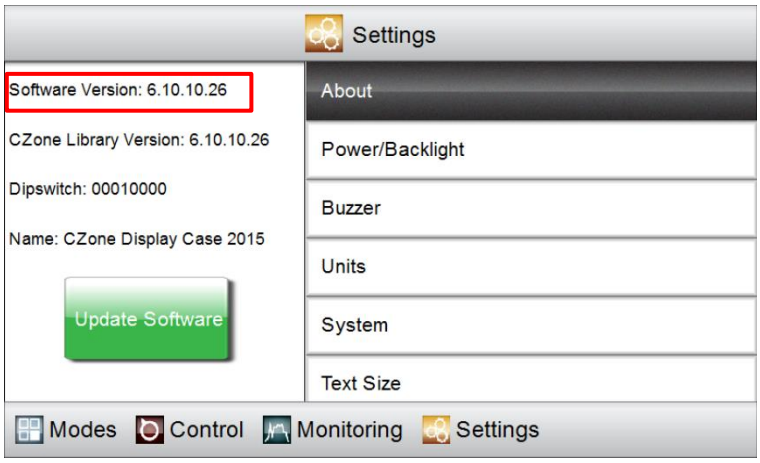

The current software version is listed at the top of the page. To install a newer version follow the below steps

4.3.2 Updating Software via microSD

1. Copy the Touch 5 firmware file (extension .upd) on the root directory of a microSD card.
2. Insert the microSD card in the card reader slot of the Touch 5 (refer to chapter 1.2.4 for process).
3. Press the 'Update Software' button on the Settings > About page and press 'Yes' when prompted (Alternatively, the update will start if the power on the Touch 5 is cycled).
4. The display will reboot and start installing the new software, this process may take a few minutes.
5. When complete the display will boot up to the main screen. Go to Settings > About to confirm the new Software Version.

4.4 Wireless Interface Setup

To configure the Wireless Interface on the Touch 5 go to Settings > System > Server > Configure

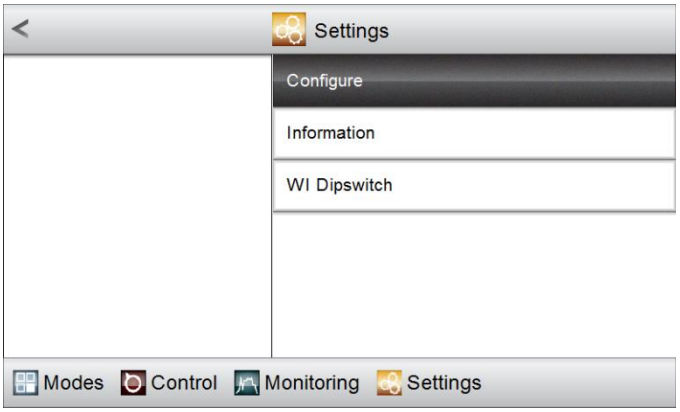

Select the Server Mode (Access Point, Client Mode or Disabled), then press the right arrow (refer to the Wireless Interface Setup Instructions for a definition of these server modes).

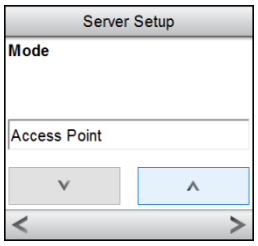

Select the WI Dipswitch then press the right arrow (the dipswitch should match what is configured in the CZone Configuration)

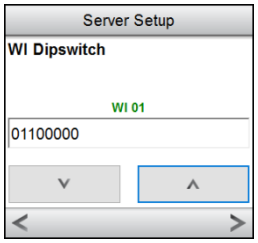

Select Yes to confirm setup, then press the right arrow

The Wireless Interface is now configured.

4.5 Connecting iPad to Touch 5

Follow the below steps to connect an iPad to the Touch 5 via WiFi. Before proceeding a WI package must be present on the Touch 5's CZone server, this package contains the custom favourite page settings and images. Refer to the Wireless Interface Setup Instructions for this process.

1. Download the CZone App on your iPad from the Apple App Store

2. On the Touch 5 Go to Settings > System > Server > Information

3. The following screen will show the Touch 5's unique SSID and Password

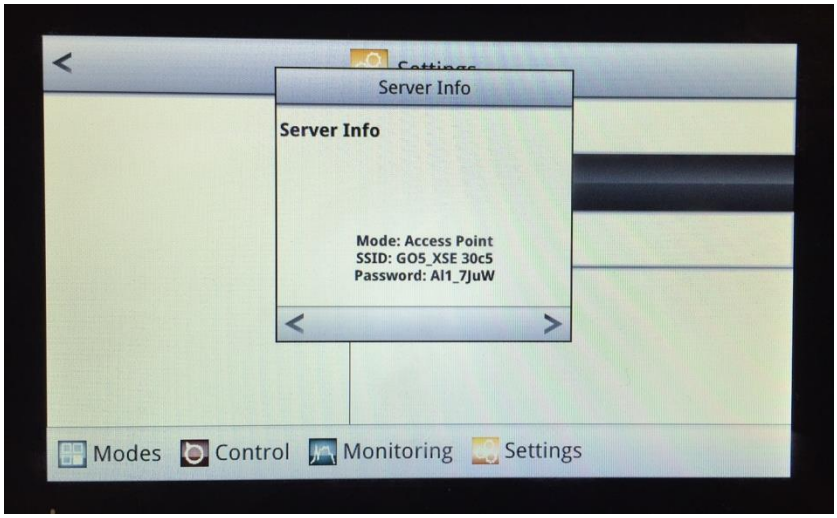

4. Go to Settings > WiFi on your iPad, select the SSID and enter the Password as shown on the Touch 5 Server Info

5. Once your iPad has successfully connected open the CZone App

6. Enter the server username and password and press connect

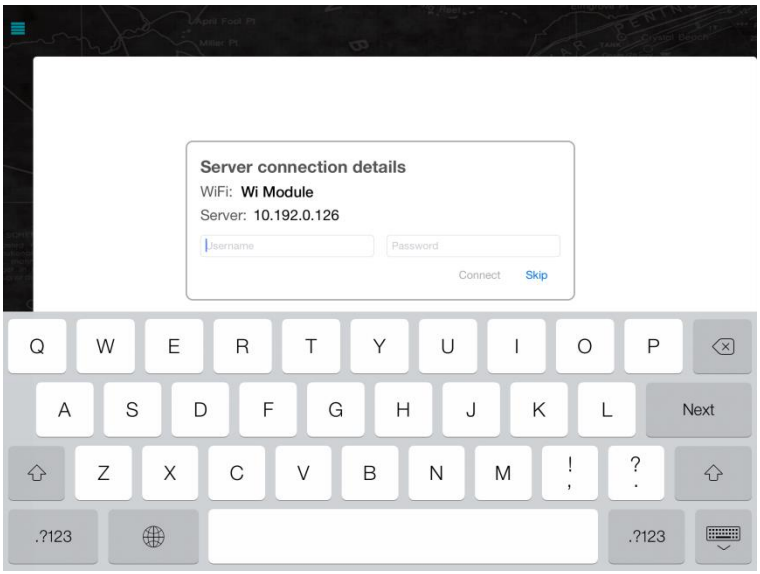

7. The Wireless package will start downloading

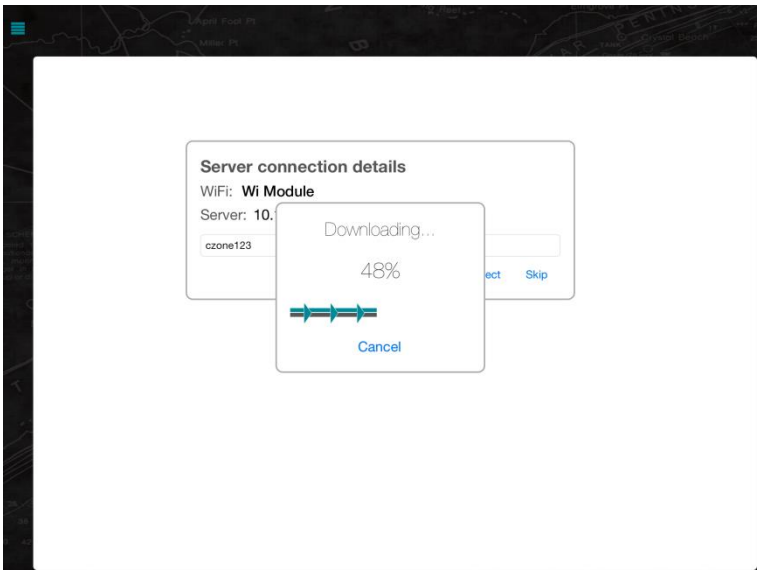

8. Once the download is complete you will see the favourites page of the configured system.

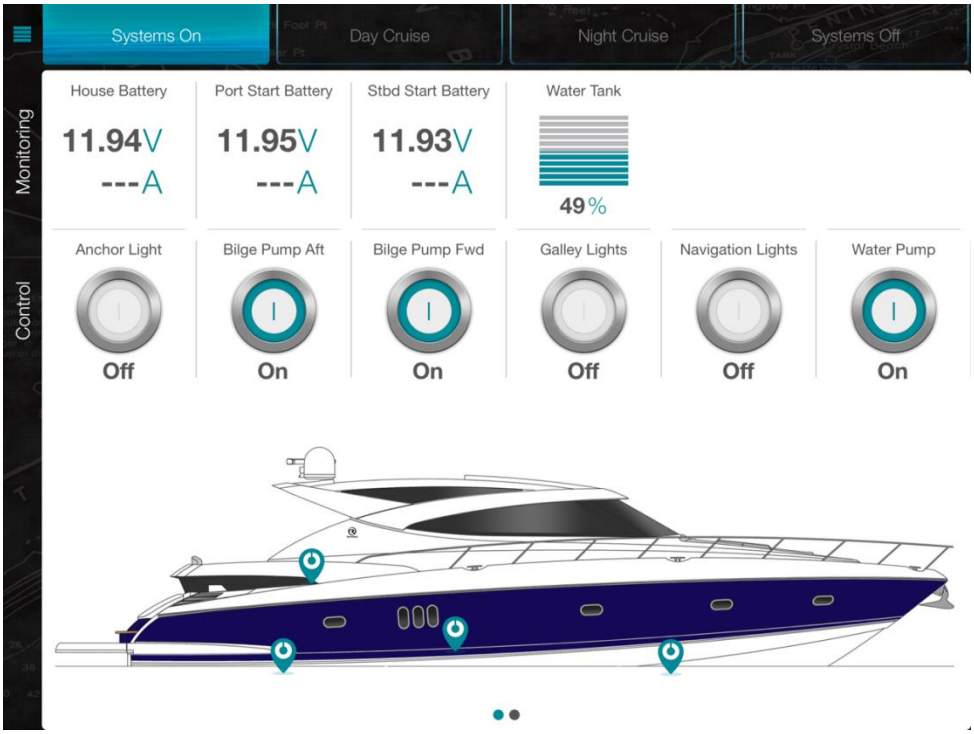

Figure 8. CZone iPad App Favourites Page Example

5 Specifications

5.1 Technical Specifications

Model	Touch 5
Article number	80-911-0124-00
Casing	PCB/ABS
Display Type	WVGA Colour TFT LCD
Display Resolution	480 x 800 pixels (H x W)
Screen Brightness	1200 nits
Operating Temperature	-15°C to +55°C (+5°F to +131°F)
Water Ingress	IPX6 and 7
Operating Voltage	10 – 17V DC
Power Consumption	900mA @ 13.5V
Processor	iMX61 single core
Weight (excluding mounting hardware)	526 grams (1.16lbs)
Conformity	CE, C-Tick

5.2 Dimensions

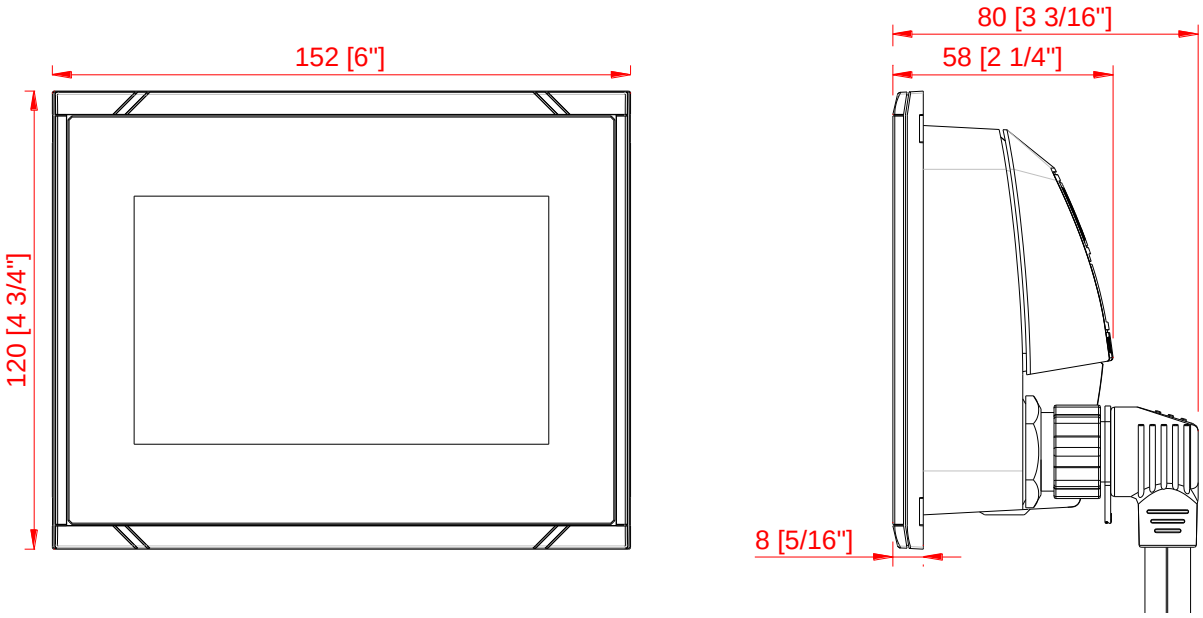

Figure 9. Dimensions