SAINT Mega-9 Rapidfire Lever

SL-M810

For Left Hand

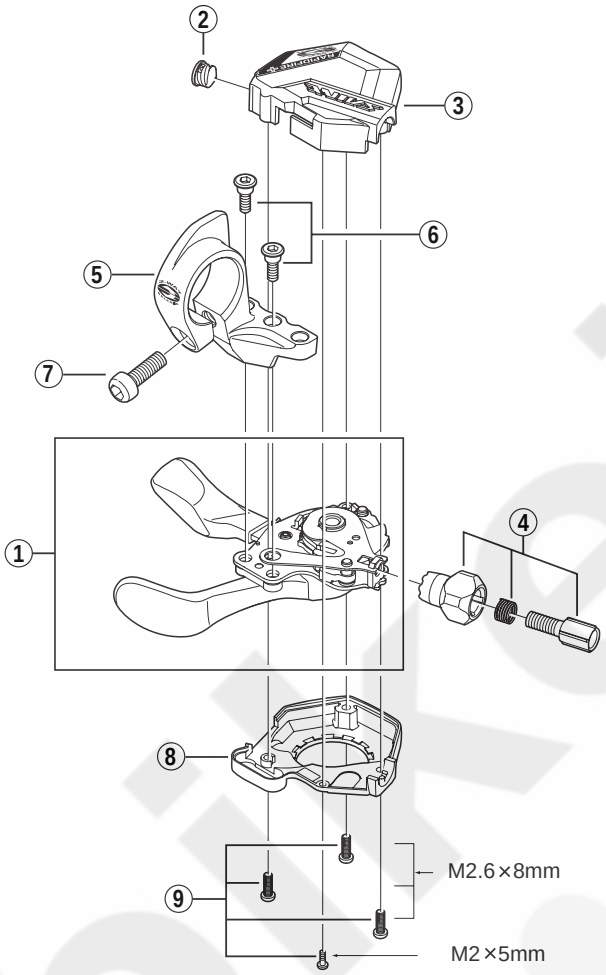

For Right Hand

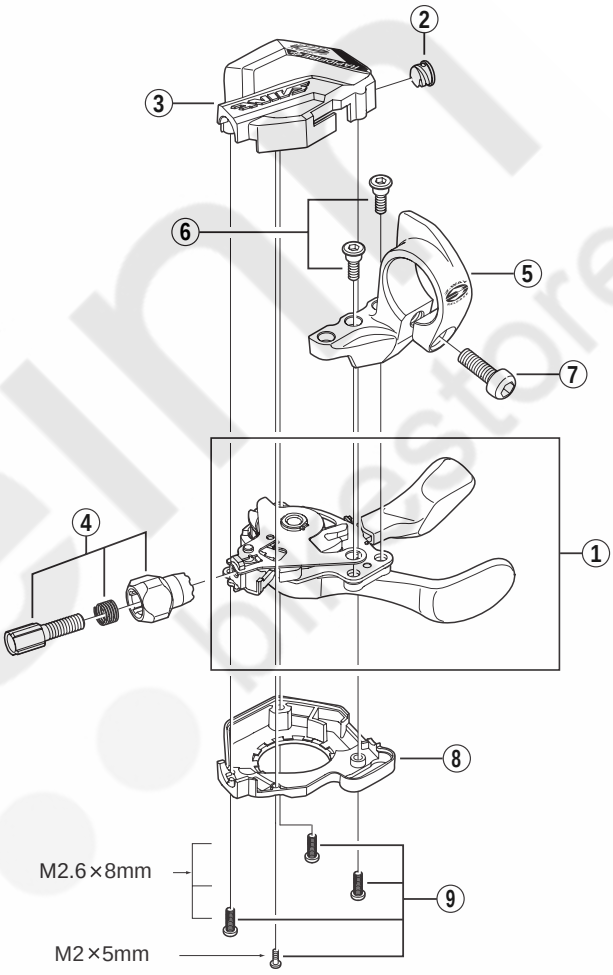

ITEM NO.	SHIMANO CODE NO.	DESCRIPTION	INTERCHANGE-ABILITY SL-M770	SL-M530	
1	**Y-6R1 98010**	R.H. Shifting Lever Unit			
	Y-6R1 98020	L.H. Shifting Lever Unit			
2	**Y-6CD33000**	Inner Hole Cap	A	A	
3	**Y-6R1 02000**	R.H. Upper Cover			
	Y-6R2 52000	L.H. Upper Cover			
4	**Y-6R1 98030**	R.H. Cable Adjustting Bolt Unit			
	Y-6R1 98040	L.H. Cable Adjustting Bolt Unit			
5	**Y-6MP01200**	R.H. Bracket			
	Y-6NX51200	L.H. Bracket			
6	**Y-6MP98080**	SL Fixing Bolt (M4) 2pcs.	A		
7	**Y-8U9 14000**	Clamp Bolt (M6 x 14.8)	A		
8	**Y-6R1 04000**	R.H. Bottom Cover			
	Y-6R2 54000	L.H. Bottom Cover			
9	**Y-6R1 98050**	Cover Fixing Bolt Set 4pcs.			

0804-2829A

A: Same parts.
B: Parts are usable, but differ in materirals, appearance, finish, size, etc.
Absence of mark indicates non-interchangeability.

Specifications are subject to change without notice.

SHIMANO